# Polo Estate 1996 ➤

| 4-cyl. injection engine Mechanics (1.6 l engine) | | | | | | | | | |
|---|---|---|---|---|---|---|---|---|---|
| Engine ID | AEH | AKL | APF | AUR | | | | | |

Edition 12.1999

satelettronica

Protected by copyright. Copying for private or commercial purposes, in part or in whole, is not permitted unless authorised by Volkswagen AG. Volkswagen AG does not guarantee or accept any liability with respect to the correctness of information in this document. Copyright by Volkswagen AG.

# List of Workshop Manual Repair GroupsList of Workshop Manual Repair GroupsList of Workshop Manual Repair Groups

## Polo Estate 1996 ➤

## 4-cyl. injection engine Mechanics (1.6 l engine)

Protected by copyright. Copying for private or commercial purposes, in part or in whole, is not permitted unless authorised by Volkswagen AG. Volkswagen AG does not guarantee or accept any liability with respect to the correctness of information in this document. Copyright by Volkswagen AG.

satelettronica

Repair Group

00 - Technical data
10 - Removing and installing engine
13 - Crankshaft group
15 - Cylinder head, Valve gear
17 - Lubrication
19 - Cooling system
20 - Fuel supply system
26 - Exhaust system

Technical information should always be available to the foremen and mechanics, because their careful and constant adherence to the instructions is essential to ensure vehicle road-worthiness and safety. In addition, the normal basic safety precautions for working on motor vehicles must, as a matter of course, be observed.

All rights reserved.
No reproduction without prior agreement from publisher.

Copyright © 2011 Volkswagen AG, Wolfsburg

# Contents

00 - Technical data . . . . . 1
1 Technical data . . . . . 1
1.1 Technical data . . . . . 1
1.2 Engine number . . . . . 1
1.3 Engine data . . . . . 1

10 - Removing and installing engine . . . . . 3
1 Removing and installing engine . . . . . 3
1.1 Removing and installing engine . . . . . 3
1.2 Notes on removing . . . . . 4
1.3 Securing engine to assembly stand . . . . . 7
1.4 Notes on installing . . . . . 8
1.5 Tightening torques . . . . . 11
1.6 Assembly mountings . . . . . 11
1.7 Renewing bonded rubber bushes on subframe . . . . . 13
1.8 Additional information and removal instructions for vehicles with air conditioner . . . . . 14

13 - Crankshaft group . . . . . 16
1 Dismantling and assembling engine . . . . . 16
1.1 Dismantling and assembling engine . . . . . 16
1.2 Removing and installing ribbed belt . . . . . 26
2 Removing and installing sealing flange and pressure plate/drive plate . . . . . 28
2.1 Removing and installing sealing flange and pressure plate/drive plate . . . . . 28
2.2 Renewing crankshaft oil seal -belt pulley end . . . . . 31
2.3 Removing and installing front sealing flange . . . . . 34
2.4 Removing and installing drive plate . . . . . 36
3 Removing and installing crankshaft . . . . . 39
3.1 Removing and installing crankshaft . . . . . 39
3.2 Colour markings . . . . . 43
3.3 Crankshaft dimensions . . . . . 43
4 Dismantling and assembling pistons and conrods . . . . . 44
4.1 Dismantling and assembling pistons and conrods . . . . . 44
4.2 Piston and cylinder dimensions . . . . . 50

15 - Cylinder head, Valve gear . . . . . 51
1 Removing and installing cylinder head . . . . . 51
1.1 Removing and installing cylinder head . . . . . 51
1.2 Removing, installing and tensioning toothed belt . . . . . 55
1.3 Checking semi-automatic toothed belt tensioning roller . . . . . 58
1.4 Removing and installing cylinder head . . . . . 59
1.5 Checking compression pressures . . . . . 63
2 Servicing valve gear . . . . . 64
2.1 Servicing valve gear . . . . . 64
2.2 Reworking valve seats . . . . . 70
2.3 Replacing camshaft oil seal . . . . . 72
2.4 Removing and installing camshaft . . . . . 75
2.5 Checking hydraulic bucket tappets . . . . . 78
2.6 Checking valve guides . . . . . 79
2.7 Renewing valve guides . . . . . 80
2.8 Renewing valve stem seals . . . . . 81

17 - Lubrication . . . . . 84
1 Removing and installing parts of the lubrication system . . . . . 84

Protected by copyright. Copying for private or commercial purposes, in part or in whole, is not permitted unless authorised by Volkswagen AG. Volkswagen AG does not guarantee or accept any liability with respect to the correctness of information in this document. Copyright by Volkswagen AG.
satelettronica

1.1 Removing and installing parts of the lubrication system . . . 84
1.2 Removing and installing sump . . . 92
1.3 Checking oil pressure and oil pressure switch . . . 94

19 - Cooling system . . . 97
1 Removing and installing parts of cooling system . . . 97
1.1 Removing and installing parts of cooling system . . . 97
1.2 Parts of cooling system body side . . . 98
1.3 Parts of cooling system engine side . . . 101
1.4 Coolant hose connection diagram . . . 111
1.5 Draining and filling cooling system . . . 114
1.6 Removing and installing radiator . . . 117
1.7 Removing and installing coolant pump . . . 119
1.8 Removing and installing thermostat . . . 121

20 - Fuel supply system . . . 123
1 Removing and installing parts of fuel supply system . . . 123
1.1 Removing and installing parts of fuel supply system . . . 123
1.2 Removing and installing fuel tank with its attachments and fuel filter . . . 124
1.3 Safety precautions when working on the fuel supply system . . . 130
1.4 Rules for cleanliness . . . 131
1.5 Removing and installing fuel delivery unit . . . 131
1.6 Removing and installing fuel gauge sender . . . 133
1.7 Removing and installing fuel tank . . . 134
1.8 Crash fuel shut-off . . . 135
1.9 Checking fuel pump . . . 136
2 Accelerator mechanism . . . 144
2.1 Accelerator mechanism . . . 144
2.2 Servicing accelerator mechanism . . . 144
2.3 Adjusting throttle cable . . . 145
3 Checking electronic power control (EPC) . . . 147
3.1 Checking electronic power control (EPC) . . . 147
3.2 Function of EPC system . . . 148
3.3 Checking accelerator pedal position sender . . . 149
3.4 Adjusting pedal position sender . . . 153
4 Activated charcoal filter system . . . 155
4.1 Activated charcoal filter system . . . 155
4.2 Function . . . 155
4.3 Servicing parts of the activated charcoal filter system . . . 156
4.4 Checking fuel tank breather . . . 158

26 - Exhaust system . . . 160
1 Removing and installing parts of exhaust system . . . 160
1.1 Removing and installing parts of exhaust system . . . 160
1.2 Exhaust manifold, front exhaust pipe and catalyst with attachments . . . 161
1.3 Checking catalyst . . . 171
2 Secondary air system . . . 173
2.1 Secondary air system . . . 173
2.2 Function . . . 173
2.3 Removing and installing parts of the secondary air system . . . 174
2.4 Checking secondary air pump motor . . . 178
2.5 Checking combi-valve . . . 179
2.6 Checking secondary air inlet valve . . . 181
3 Exhaust gas recirculation system . . . 182
3.1 Exhaust gas recirculation system . . . 182
3.2 Servicing parts of exhaust gas recirculation system . . . 183

Volkswagen AG. Volkswagen AG does not guarantee or accept any liability with respect to the correctness of information in this document. Copyright by Volkswagen AG
satelettronica

3.3 Checking exhaust gas recirculation system . . . . . .186
3.4 Checking potentiometer for exhaust gas recirculation . . . . . .188

Protected by copyright. Copying for private or commercial purposes, in part or in whole, is not permitted unless authorised by Volkswagen AG. Volkswagen AG does not guarantee or accept any liability with respect to the correctness of information in this document. Copyright by Volkswagen AG.
satelettronica

Protected by copyright. Copying for private or commercial purposes, in part or in whole, is not permitted unless authorised by Volkswagen AG. Volkswagen AG does not guarantee or accept any liability with respect to the correctness of information in this document. Copyright by Volkswagen AG.

satelettronica

# 00 - Technical data

## 1 - Technical data

### 1.1 - Technical data

### 1.2 - Engine number

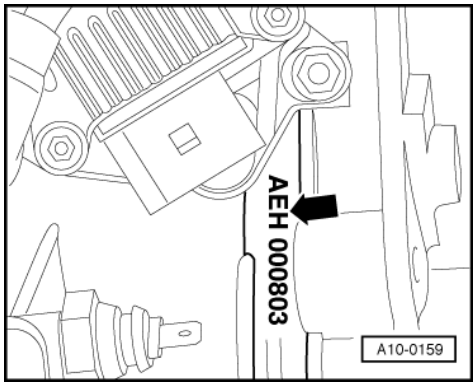


-> The engine number ("Code letters" and "Serial number") can be found on the joint between engine/gearbox.

The engine number consists of up to nine characters (alphanumeric). The first part (maximal 3 characters) makes up the "engine code", and the second part (6 characters), the "serial number". If more than 999,999 engines with the same engine code are produced, the first of the six characters is replaced with a letter.

Additionally there is a sticker on the toothed belt guard with "Engine code" and "Serial number".

The engine code is also included on the vehicle data plate.

### 1.3 - Engine data

| Code letters | | AEH | AKL | APF | AUR |
|---|---|---|---|---|---|
| Manufactured | | 10.99 ▸ | 10.99 ▸ | 01.00 ▸ | 05.00 ▸ |
| Exhaust emissions fulfil | | MVEG II standard | D3 standard | D4 standard | EURO IV |
| Emissions warning lamp | | No | No | No | Yes |
| Capacity | ltr. | 1.6 | 1.6 | 1.6 | 1.6 |
| Output | kW at rpm | 74/5600 | 74/5600 | 74/5600 | 74/5600 |
| Torque | Nm at rpm | 145/3800 | 145/3800 | 145/3800 | 145/3800 |
| Bore | ø mm | 81.0 | 81.0 | 81.0 | 81.0 |
| Stroke | mm | 77.4 | 77.4 | 77.4 | 77.4 |
| Compression | | 10.2 | 10.2 | 10.2 | 10.2 |
| RON | min. | 95 unleaded | 95 unleaded | 95 unleaded | 95 unleaded |
| Injection, ignition | | SIMOS 2.1 | SIMOS 2.1 | SIMOS 3.3 | SIMOS 3.3 |
| Knock control | | Yes | Yes | Yes | Yes |
| Self-diagnosis | | Yes | Yes | Yes | Yes |

Protected by copyright. Copying for private or commercial purposes, in part or in whole, is not permitted unless authorised by Volkswagen AG. Volkswagen AG does not guarantee or accept any liability with respect to the correctness of information in this document. Copyright by Volkswagen AG.
satelettronica

| Code letters | AEH | AKL | APF | AUR |
|---|---|---|---|---|
| Lambda control | Yes | Yes | Yes1) | Yes1) |

| Code letters | AEH | AKL | APF | AUR |
|---|---|---|---|---|
| Catalyst | Yes | Yes | Yes | Yes |
| Exhaust gas recirculation | No | No | Yes | Yes |
| Charging | No | No | No | No |
| Secondary air system | No | No | Yes | Yes |
| Variable intake manifold | Yes | Yes | Yes | Yes |
| Camshaft adjustment | No | No | No | No |

1) With 2 Lambda probes

Protected by copyright. Copying for private or commercial purposes, in part or in whole, is not permitted unless authorised by Volkswagen AG. Volkswagen AG does not guarantee or accept any liability with respect to the correctness of information in this document. Copyright by Volkswagen AG.

satelettronica

# 10 - Removing and installing engine

## 1 - Removing and installing engine

### 1.1 - Removing and installing engine

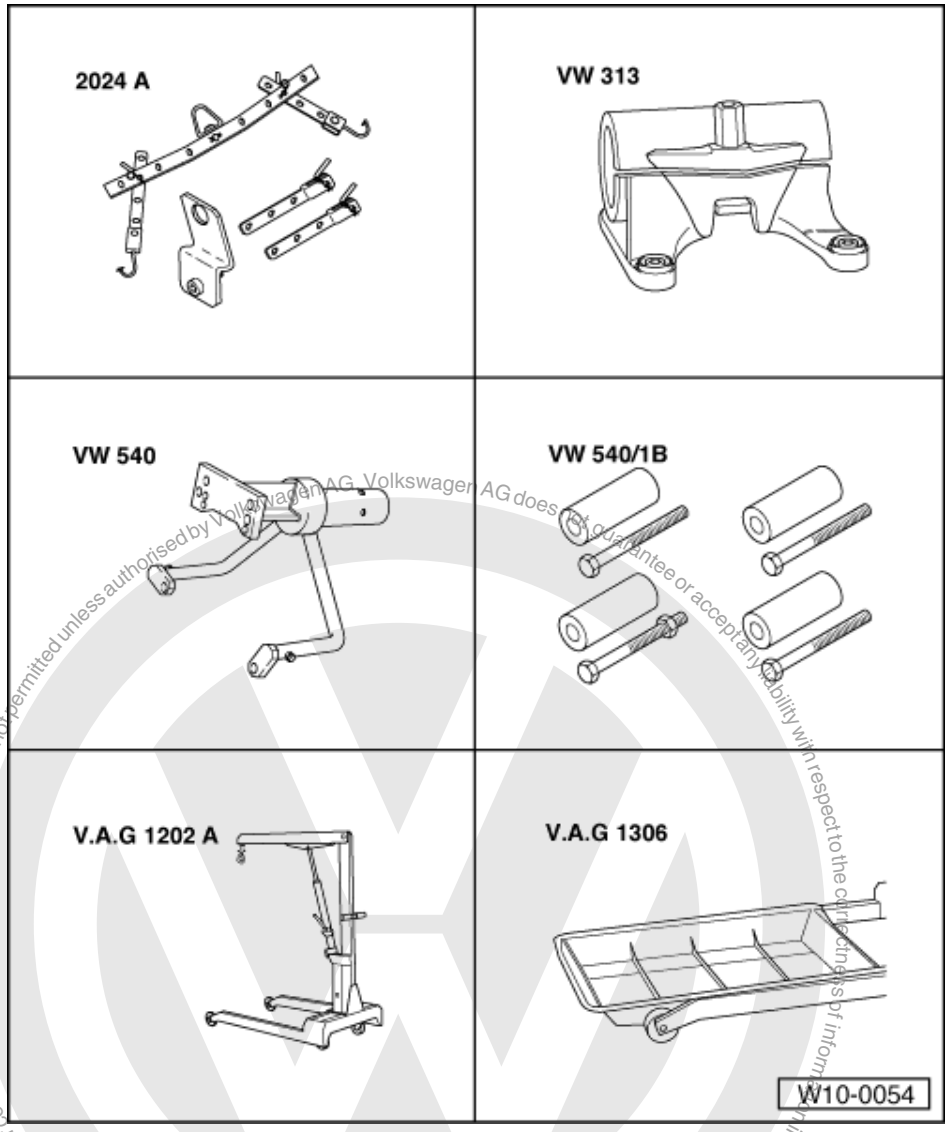


**Special tools, workshop equipment, test and measuring appliances and auxiliary items required**

- 2024 A Lifting tackle
- VW 313 Support clamp
- VW 540 Engine and gearbox support
- VW 540/1 B Supplementary set
- V.A.G 1202 A Workshop crane
- V.A.G 1306 Drip tray

Protected by copyright. Copying for private or commercial purposes, in part or in whole, is not permitted unless authorised by Volkswagen AG. Volkswagen AG does not guarantee or accept any liability with respect to the correctness of information in this document. Copyright by Volkswagen AG.
satelettronica

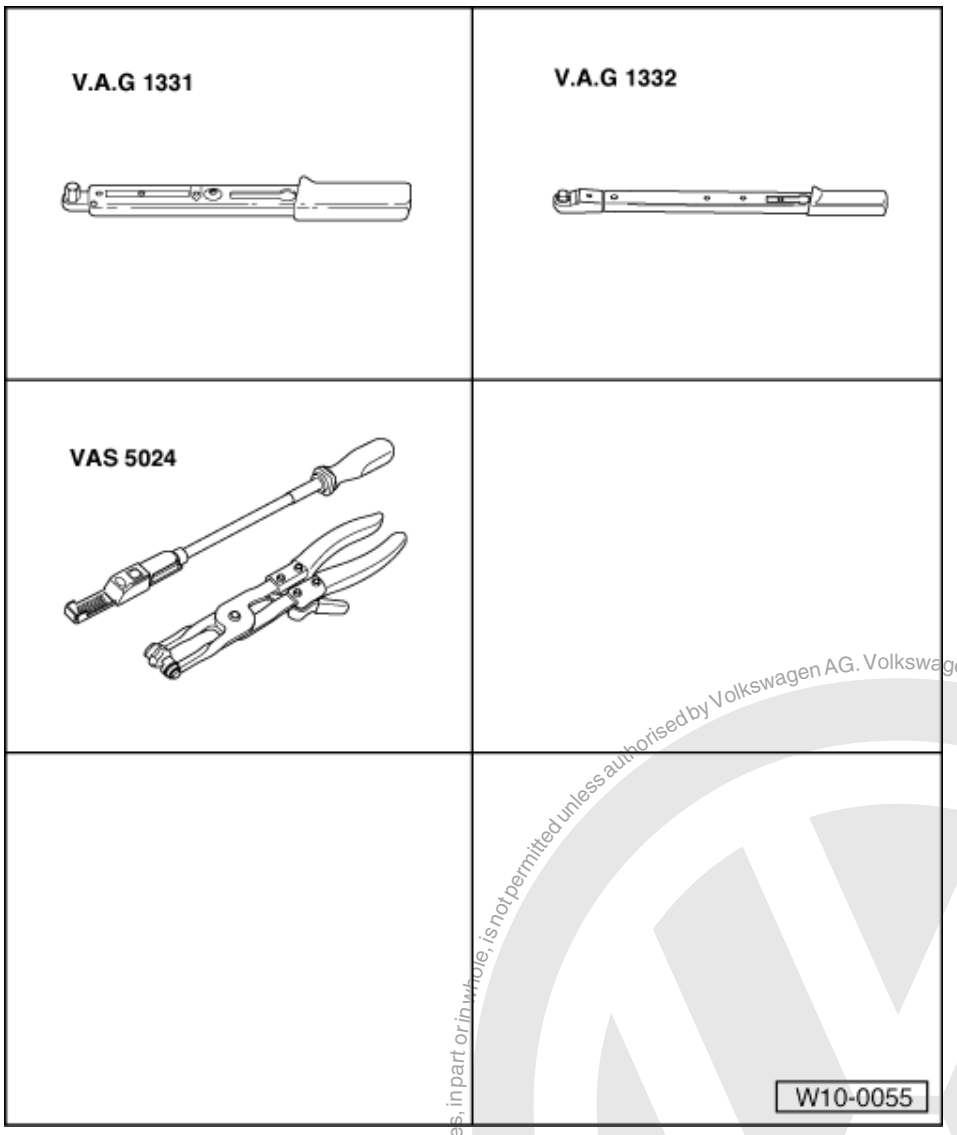


- V.A.G 1331 Torque wrench (5...50 Nm)
- V.A.G 1332 Torque wrench (40...200 Nm)
- VAS 5024 Assembly tool for spring-type clip
- G 000 100 Grease (vehicles with manual gearbox)
- Cable tie

## 1.2 - Notes on removing

*Note:*

*Check whether a coded radio is installed as during the forthcoming work sequences the battery earth strap must be disconnected. Obtain radio code first if necessary.*

- The engine is removed forwards together with the gearbox.
- All cable ties which are opened or cut open when removing engine, must be replaced in the same position when installing engine.
- With the ignition switched off disconnect battery earth strap.
- Remove engine cover.
- Remove battery.

- Unscrew power steering reservoir and tie-up.

Protected by copyright. Copying for private or commercial purposes, in part or in whole, is not permitted unless authorised by Volkswagen AG. Volkswagen AG does not guarantee or accept any liability with respect to the correctness of information in this document. Copyright by Volkswagen AG.
satelettronica

- Remove intake hose between air mass meter (G70) and throttle valve control part (J338).
- Remove air cleaner.

Warning!
Fuel system is under pressure! Before opening the system place a cloth around the connection. Then release pressure by carefully loosening the connection.

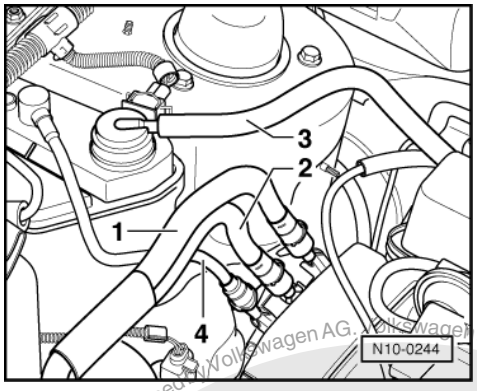


- -> Pull off supply pipe/hose -1- (with white marking) and return pipe/hose -2- (with blue marking) and collect fuel that leaks out with a cloth.

***Note:***

*Press buttons on hose couplings to do this.*

- Seal the pipes so that the fuel system is not contaminated by dirt etc.
- Observe rules for cleanliness => Page 131 .
- Pull hose -3- off activated charcoal filter solenoid valve 1.
- Remove noise insulation tray.
- Remove ribbed belt => Page 26 .
- Remove front exhaust pipe from exhaust manifold => Page 161 , exhaust manifold, front exhaust pipe and catalyst with attachments.

- Disconnect drive shafts at gearbox:

=> Running gear, Axles, Steering; Repair group 40; Removing and installing drive shaft Removing and installing drive shaft

- Unscrew pipes for power steering from engine carrier.
- Open and close the expansion tank sealing cap to release pressure in cooling system.
  Drain coolant => Page 114 .
- Pull connectors off thermo-switch and radiator fan.
- Pull radiator coolant hoses off engine using spring-type clip pliers V.A.G 1921 or VAS 5024.
- Removing lock carrier with attachments:

=> General body repairs, exterior; Repair group 50; Body, front; Removing and installing lock carrier with attachments. Body, front Removing and installing lock carrier with attachments.

*Vehicles with air conditioner:*

- Observe additional information and removal instructions => Page 14 .

- In preparation for the further dismantling work, depending on equipment, disconnect the connectors from the following components:
  ignition transformer (N152)
  Hall sender (G40)
  injectors (N30... N33,)
  coolant temperature sender (G62)
  engine speed sender (G28)
  knock sensor 1 (G61)
  EGR valve (N18) with potentiometer for
  exhaust gas recirculation (G212)
  secondary air pump motor (V101)

satelettronica

oil pressure switch (F1)
air mass meter (G70)
throttle valve control part (J338)

- Disconnect all electric wires from gearbox, alternator and starter and move clear.
- Pull off/disconnect all other electrical connections as necessary from engine and lay to one side.
- Pull vacuum and breather hoses off engine.

Vehicles with manual gearbox

- Disconnect selector mechanism from gearbox.

=> 5-Speed manual gearbox 02K; Repair group 34; Servicing selector mechanism Servicing selector mechanism

- Remove hydraulic clutch slave cylinder:

=> 5-Speed manual gearbox 02K; Repair group 30; Servicing clutch control Servicing clutch control

*Note:*

*Clutch pedal must not be depressed.*

Vehicles with automatic gearbox

- Remove selector lever cable from gearbox:

=> Automatic gearbox 01M; Repair group 37; Servicing shift mechanism; Dismantling and assembling shift mechanism Servicing shift mechanism Dismantling and assembling shift mechanism

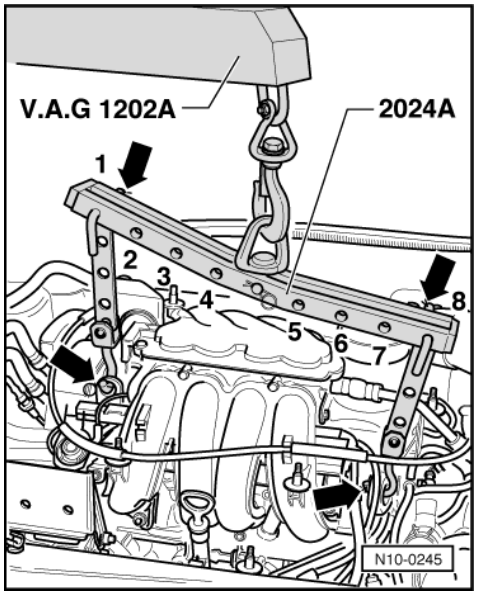


Continuation for all vehicles

- Remove power assisted steering vane pump with bracket and lay to side; hoses remain connected.

=> Running gear, Axles, Steering; Repair group 48; Assembly overview: vane pump, reservoir, hydraulic pipes Assembly overview: vane pump, reservoir, hydraulic pipes

- -> Attach lifting tackle 2024 A as follows and lift slightly with workshop crane V.A.G 1202 A:

  Pulley end:
  4th hole in hook at position 1

  Flywheel end:

Protected by copyright. Copying for private or commercial purposes, in part or in whole, is not permitted unless authorised by Volkswagen AG. Volkswagen AG does not guarantee or accept any liability with respect to the correctness of information in this document. Copyright by Volkswagen AG.
satelettronica

4th hole in hook at position 8

Warning!
The hooks and locating pins must be secured with locking pins -arrows-.

*Notes:*
- The positions marked 1...4 on the bar must be towards the pulley end.
- The holes in the hook rails are counted up from the hook.

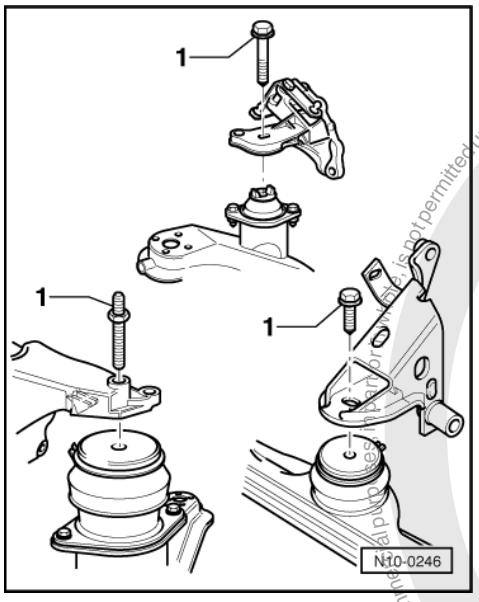


- -> Remove securing bolts -1- from assembly mounting.
- Pull assembly out forwards. When doing this, if necessary turn assembly and lower slightly.

*Note:*
*When the assembly is lifted off, it must be carefully guided to prevent damage to the bodywork.*
When working on the engine, it should be secured to the engine stand using the engine bracket VW 540.

## 1.3 - Securing engine to assembly stand

When working on the engine, it should be secured to the assembly stand support clamp VW 313 using the engine and gearbox bracket VW 540 and supplementary set VW 540/1B.

**Work sequence**
- Remove gearbox.

**Vehicles with automatic gearbox**
- Secure torque converter against "falling out" after separating engine from gearbox.

**Continuation for all vehicles**

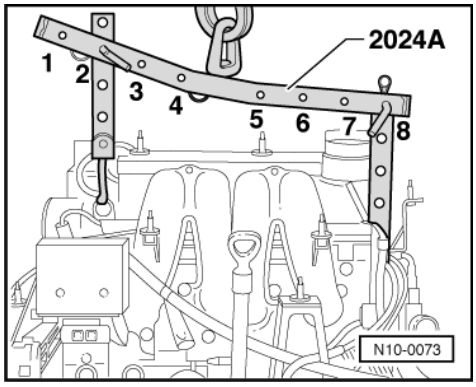


Protected by copyright. Copying for private or commercial purposes, in part or in whole, is not permitted unless authorised by Volkswagen AG. Volkswagen AG does not guarantee or accept any liability with respect to the correctness of information in this document. Copyright by Volkswagen AG.
satelettronica

- -> Attach lifting tackle 2024A as follows .

  Pulley end:
  3rd hole in hook rail at position 2

  Flywheel end:
  4th hole in hook rail at position 8

| |
|---|
| Warning!<br>The hooks and locating pins must be secured with locking pins. |

*Notes:*

- The positions marked 1...4 on the bar must be towards the pulley end.

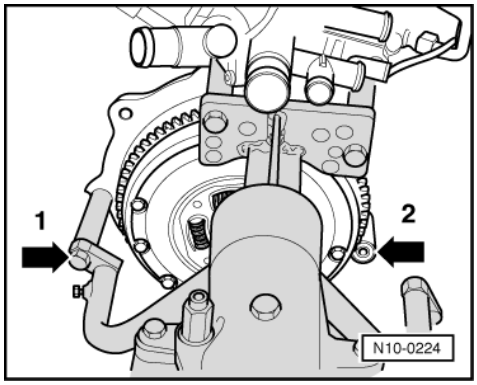


- The holes in the hook rails are counted up from the hook.

- Secure engine to support clamp VW 313 using engine and gearbox bracket VW 540 and supplementary set VW 540/1B. Fitting pins must be removed.
- -> For lower left-hand securing point -arrow 1-, use a commercially available M12x160 bolt with a tensile strength of 8.8. The unused drilling -arrow 2- is for mounting counter hold (VW 558, 3386) to loosen the flywheel or drive plate.

## 1.4 - Notes on installing

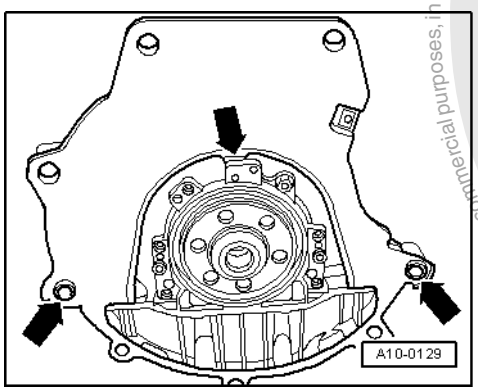


Installation is carried out in the reverse sequence, when doing this note the following:

- Insert in the cylinder block new dowel sleeves for centralising engine and gearbox.
- -> Fit intermediate plate onto sealing flange and slide onto dowel sleeves -arrows-.

**Vehicles with manual gearbox**

- Lightly grease input shaft splines with G 000 100.

satelettronica
Protected by copyright. Copying for private or commercial purposes, in part or in whole, is not permitted unless authorised by Volkswagen AG. Volkswagen AG does not guarantee or accept any liability with respect to the correctness of information in this document. Copyright by Volkswagen AG.

- Check clutch and clutch operating mechanism, then install.

=> 5-Speed manual gearbox 02K; Repair group 30; Servicing clutch control Servicing clutch control

Continuation for all vehicles

- When installing the assembly, ensure sufficient clearance to drive shafts.

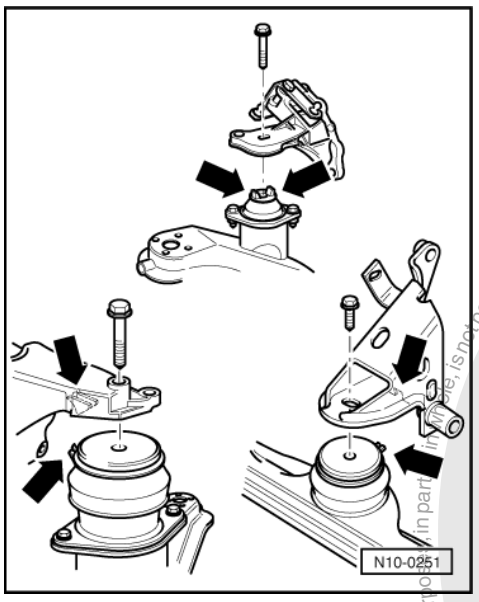


- -> When installing the assembly, take note that the bonded rubber bush lugs rear left, rear front and right locate in the inserts on the consoles -arrows-.
- Align engine mountings stress-free by rocking.

*Note:*

*Assembly mounting tightening torques*

*=> Page 11 .*

Vehicles with manual gearbox

- Install gear selector mechanism:

=> 5-Speed manual gearbox 02K; Repair group 34; Servicing selector mechanism Servicing selector mechanism

- If necessary, adjust gear selector mechanism:

=> 5-Speed manual gearbox 02K; Repair group 34; Servicing selector mechanism Servicing selector mechanism

Vehicles with automatic gearbox

- Install selector cable on gearbox, adjust if necessary:

=> Automatic gearbox 01M; Repair group 37; Servicing shift mechanism; Dismantling and assembling shift mechanism Servicing shift mechanism Dismantling and assembling shift mechanism

Continuation for all vehicles

- Electrical connections and routing:

Protected by copyright. Copying for private or commercial purposes, in part or in whole, is not permitted unless authorised by Volkswagen AG. Volkswagen AG does not guarantee or accept any liability with respect to the correctness of information in this document. Copyright by Volkswagen AG.
satelettronica

=> Electrical system; Repair group 97

- Installing lock carrier with attachments:

=> General body repairs, exterior; Repair group 50; Body, front; Removing and installing lock carrier with attachments. Body, front Removing and installing lock carrier with attachments.

**Vehicles with air conditioner**

- Installing air conditioner compressor:

=> Heating, Air conditioning; Repair group 87; Removing and installing compressor bracket Removing and installing compressor bracket

**Continuation for all vehicles**

- Install drive shafts:

=> Running gear, Axles, Steering; Repair group 40; Removing and installing drive shaft Removing and installing drive shaft

- Fit front exhaust pipe to exhaust manifold => Page 161 , exhaust manifold, front exhaust pipe and catalyst with attachments.
- Installing P.A.S. vane pump:

=> Running gear, Axles, Steering; Repair group 48; Assembly overview: vane pump, reservoir, hydraulic pipes Assembly overview: vane pump, reservoir, hydraulic pipes

- Install ribbed belt => Page 26 .
- Install noise insulation tray.

- Tighten power steering reservoir nuts/bolts.

- Fill with coolant => Page 114
- Check headlight adjustment and adjust if necessary:

=> Maintenance booklet

**Vehicles without EPC (AEH, AKL)**

- Adjusting accelerator cable =>Page 144 , Servicing accelerator mechanism.
- Match engine electronics control unit to throttle valve control part:

=> Repair group 24; Engine control unit; Matching engine control unit to throttle valve control part Engine control unit Matching engine control unit to throttle valve control part

**Vehicles with EPC (APF, AUR)**

- Perform the work sequence "Erasing learnt values and adapting engine control unit to throttle valve control part and EGR valve".

=> Repair group 24; Engine control unit; Erasing learnt values and adapting engine control unit to throttle valve control part and EGR valve Engine control unit Erasing learnt values and adapting engine control unit to throttle valve control part and EGR valve

**Vehicles with automatic gearbox**

- On vehicles with automatic gearbox the gearbox control unit must be matched additionally:

=> Self-diagnosis for automatic gearbox 01M; Repair group 01; Performing self-diagnosis; Initiating basic settings Performing self-diagnosis Initiating basic settings

Protected by copyright. Copying for private or commercial purposes, in part or in whole, is not permitted unless authorised by Volkswagen AG. Volkswagen AG does not guarantee or accept any liability with respect to the correctness of information in this document. Copyright by Volkswagen AG.
satelettronica

Protected by copyright. Copying for private or commercial purposes, in part or in whole, is not permitted unless authorised by Volkswagen AG. Volkswagen AG does not guarantee or accept any liability with respect to the correctness of information in this document. Copyright by Volkswagen AG.

**Continuation for all vehicles**
- Carry out a test drive and interrogate fault memory:

=> Repair group 01; Fault memory; Interrogating and erasing fault memory of engine control unit Fault memory Interrogating and erasing fault memory of engine control unit

## 1.5 - Tightening torques

| Bolted connection | | Tightening torque |
|---|---|---|
| Bolts, nuts | M 6 | 10 Nm |
| | M 8 | 20 Nm |
| | M10 | 45 Nm |
| | M 12 | 60 Nm |
| in variation of this | | |
| Exhaust pipe to manifold | | 40 Nm |
| Engine carrier to body | | 50 Nm |

***Note:***
*Assembly mounting tightening torques*
*=> Page 11 .*

## 1.6 - Assembly mountings

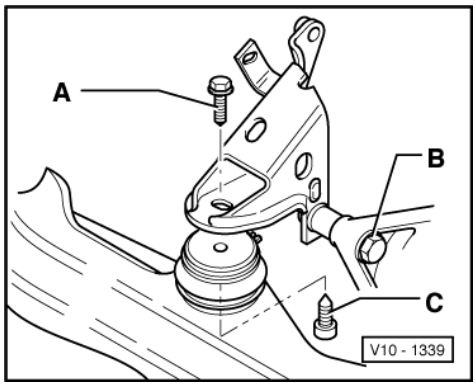


**Tightening torques**
(Bolts oiled)
-> Front assembly mounting
A = 55 Nm
B = 45 Nm
C = 55 Nm

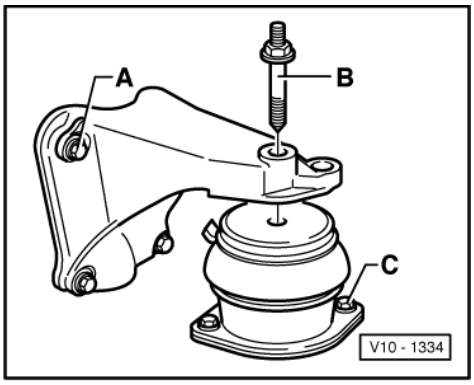


satelettronica

-> Rear right assembly mounting

A = 25 Nm
B = 60 Nm
C = 30 Nm

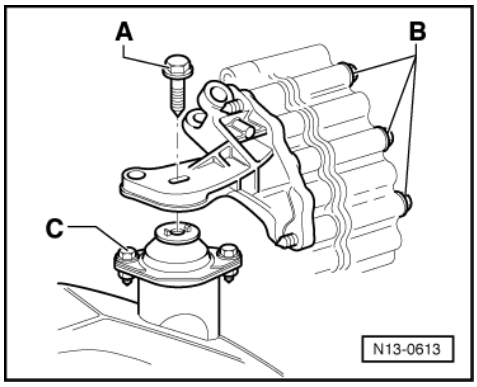


-> Rear left assembly mounting (vehicles with manual gearbox).

A = 60 Nm
B = 35 Nm
C = 30 Nm

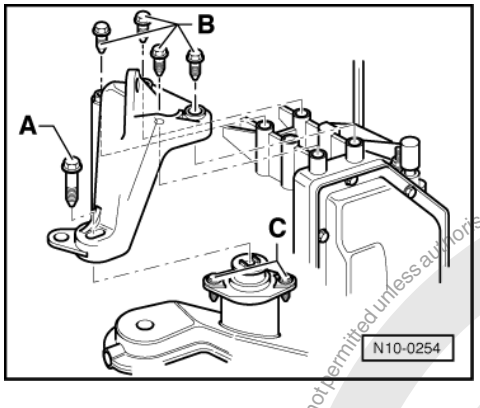


-> Rear left assembly mounting (vehicles with automatic gearbox).

A = 60 Nm
B = 35 Nm
C = 30 Nm

Protected by copyright. Copying for private or commercial purposes, in part or in whole is not permitted unless authorised by Volkswagen AG. Volkswagen AG does not guarantee or accept any liability with respect to the correctness of information in this document. Copyright by Volkswagen AG.
satelettronica

## 1.7 - Renewing bonded rubber bushes on subframe

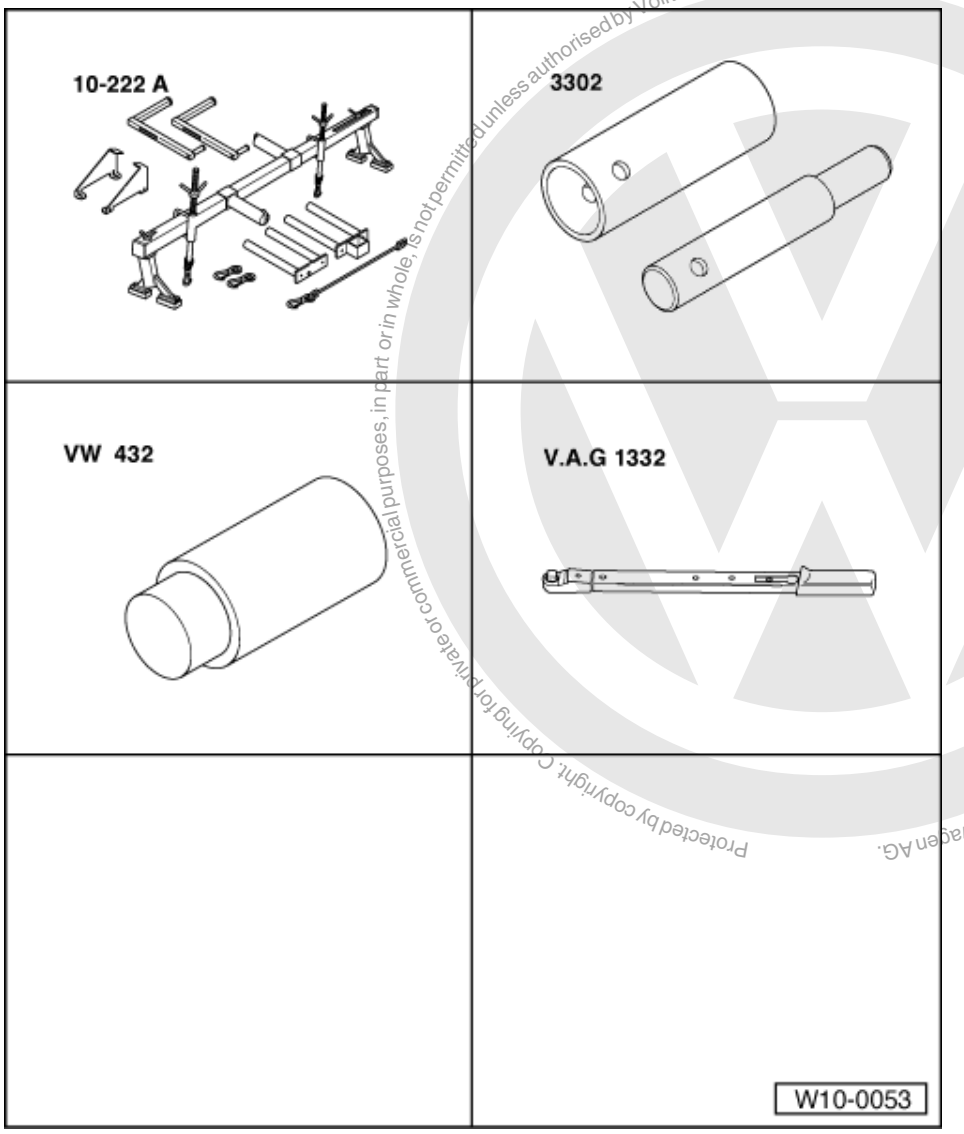


Protected by copyright. Copying for private or commercial purposes, in part or in whole, is not permitted unless authorised by Volkswagen AG. Volkswagen AG does not guarantee or accept any liability with respect to the correctness of information in this document. Copyright by Volkswagen AG.

satelettronica

### Special tools, workshop equipment, test and measuring appliances and auxiliary items required

- 10-222A Support device with legs 10-222A/1
- 3302 Peening tool
- VW 432 Thrust piece
- V.A.G 1332 Torque wrench (40...200 Nm)

### Work sequence

- Fit engine support bracket 10-222A with legs 10-222A/1.

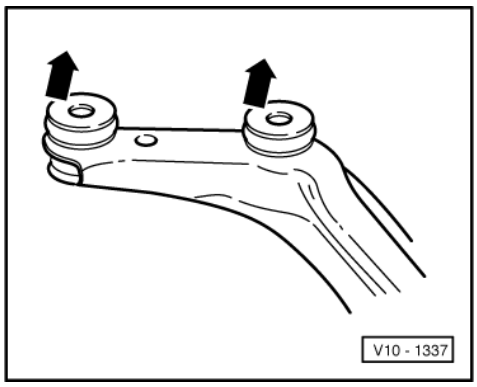


- Locate support bracket in lifting eye on left of cylinder head and take-up weight of engine.
- Remove engine carrier.
- -> Lever off washers from the spacer sleeves with pliers (replace any washers which are damaged e.g. bent washers).
- Pull out spacer sleeves and detach rubber mounting.
- Fit new rubber mounting and insert spacer sleeves as far as possible.

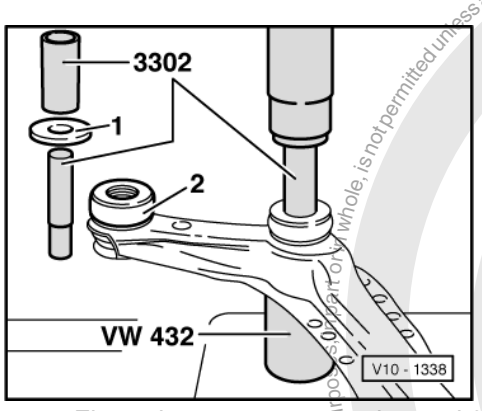


- -> Fit washers -1- over peening tool 3302 onto the rubber mounting -2-.
- Fit press sleeve of peening tool 3302 and using a press, press the washers onto the spacer sleeves and peen. Use VW 432 as packing.
- Remove any resulting protrusion/burr on the peening.

## 1.8 - Additional information and removal instructions for vehicles with air conditioner

Warning!
The air conditioning system refrigerant circuit must not be opened.

*Note:*

*To prevent damage to condenser and also to the refrigerant lines/hoses, ensure that the pipes and hoses are not stretched, kinked or bent.*

To facilitate removing and installing the engine without opening the refrigerant circuit:

- Remove retaining clamp(s) from refrigerant pipes.
- Remove ribbed belt => Page 26 .
- Removing lock carrier with attachments:

=> General body repairs, exterior; Repair group 50; Body, front; Removing and installing lock carrier with attachments. Body, front Removing and installing lock carrier with attachments.

- Unscrew cooler and cooler fan from lock carrier.
- Unscrew condenser from cooler.

satelettronica

- Removing air conditioner compressor:

=> Heating, Air conditioning; Repair group 87; removing and installing compressor bracket removing and installing compressor bracket

- Remove air conditioner compressor and condenser and position to one side so that the refrigerant hoses are not stressed.

Protected by copyright. Copying for private or commercial purposes, in part or in whole, is not permitted unless authorised by Volkswagen AG. Volkswagen AG does not guarantee or accept any liability with respect to the correctness of information in this document. Copyright by Volkswagen AG.

satelettronica

# 13 - Crankshaft group

## 1 - Dismantling and assembling engine

### 1.1 - Dismantling and assembling engine

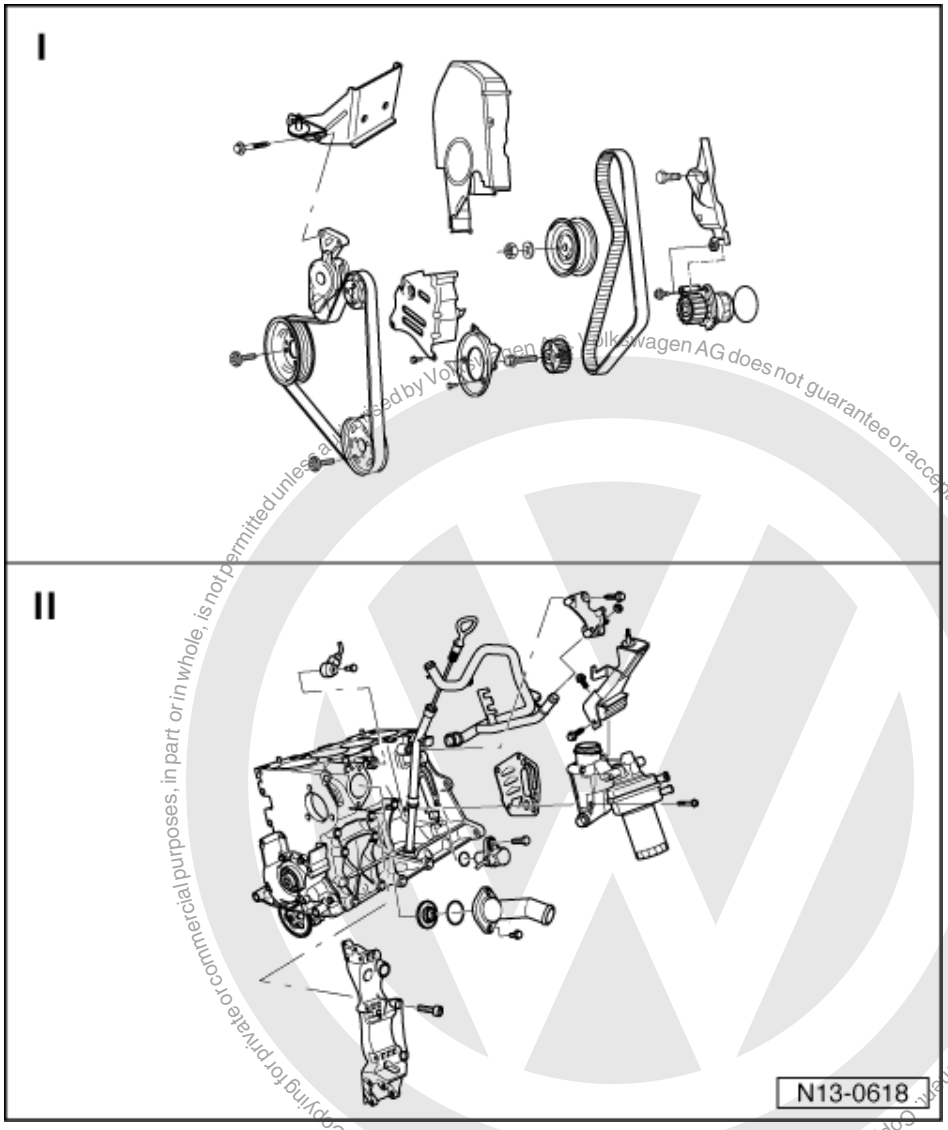


*Note:*

*Note:*

*If large amounts of metal shavings or quantities of small metal particles or wear are discovered during engine repair work, this can originate from damage to the crankshaft or conrod bearings. To prevent any further damage from occurring, carry out the following once the repair procedure is complete:*

- Thoroughly clean oil channels
- Renew oil spray jets
- Renew oil cooler

Protected by copyright. Copying for private or commercial purposes, in part or in whole, is not permitted unless authorised by Volkswagen AG. Volkswagen AG does not guarantee or accept any liability with respect to the correctness of information in this document. Copyright by Volkswagen AG.
satelettronica

- Renew oil filter

I =>Page 17

II =>Page 21

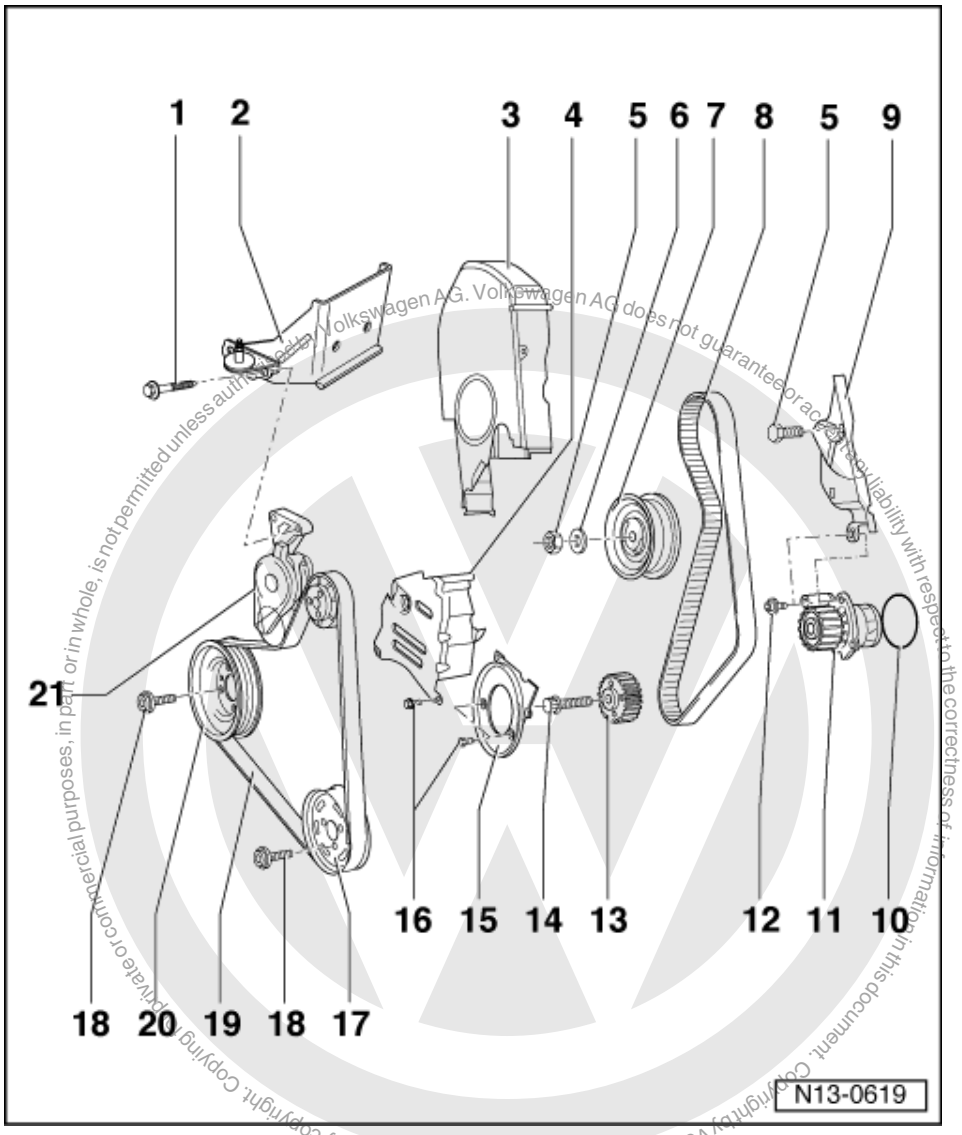


Part I

1 25 Nm
2 Bracket
- various designs possible

3 Toothed belt guard - upper part
4 Toothed belt guard - centre section
5 20 Nm
6 Washer
7 Tensioner
- Checking semi-automatic toothed belt tensioning roller => Page 58

satelettronica

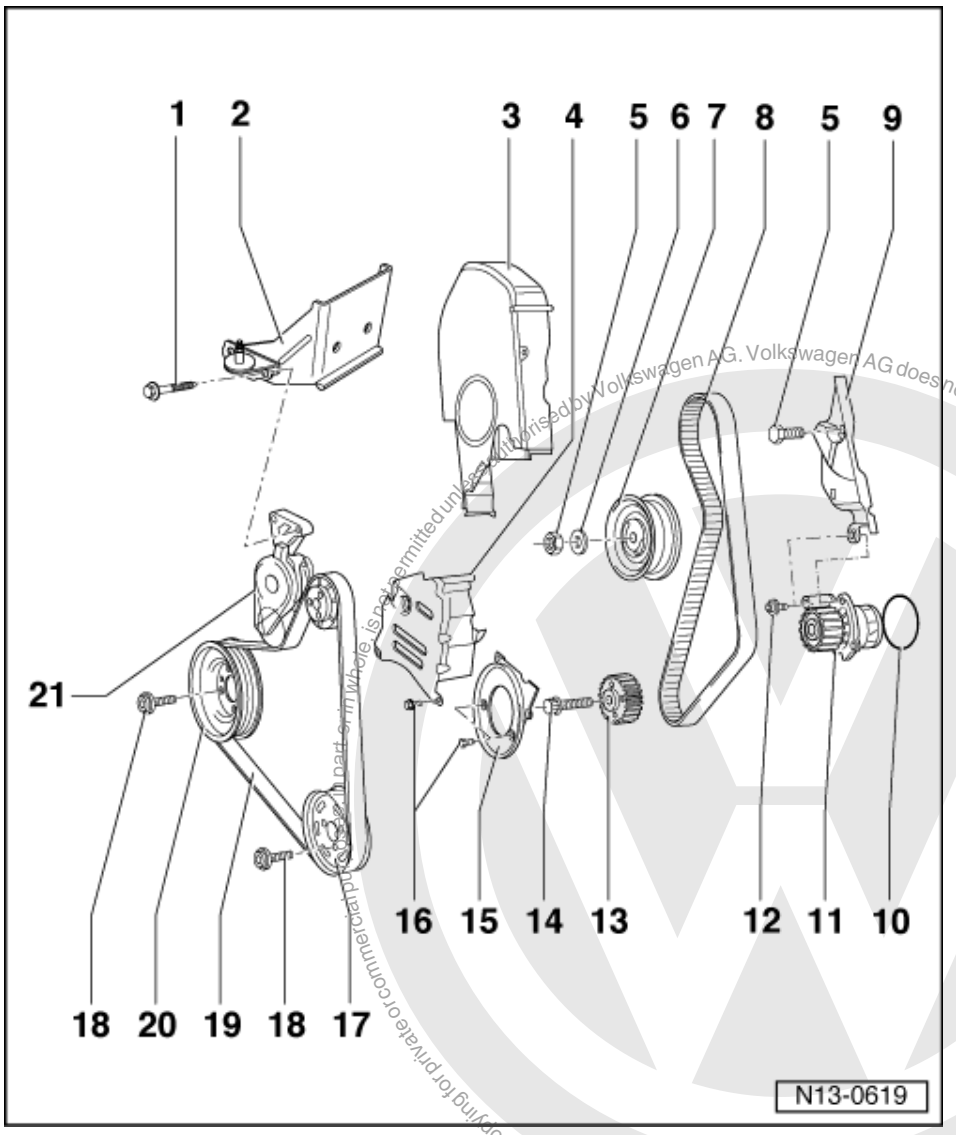


8 Toothed belt
- Mark D.O.R. before removing
- Check for wear
- Do not kink
- Removing, installing and tensioning
  => Page 55

9 Rear toothed belt guard

10 O-ring
- Renew

11 Coolant pump
- Check for ease of movement
- Note installation position
- Removing and installing
  => Page 119

12 15 Nm

13 Crankshaft toothed belt sprocket

Protected by copyright. Copying for private or commercial purposes, in part or in whole, is not permitted unless authorised by Volkswagen AG. Volkswagen AG does not guarantee or accept any liability with respect to the correctness of information in this document. Copyright by Volkswagen AG.
satelettronica

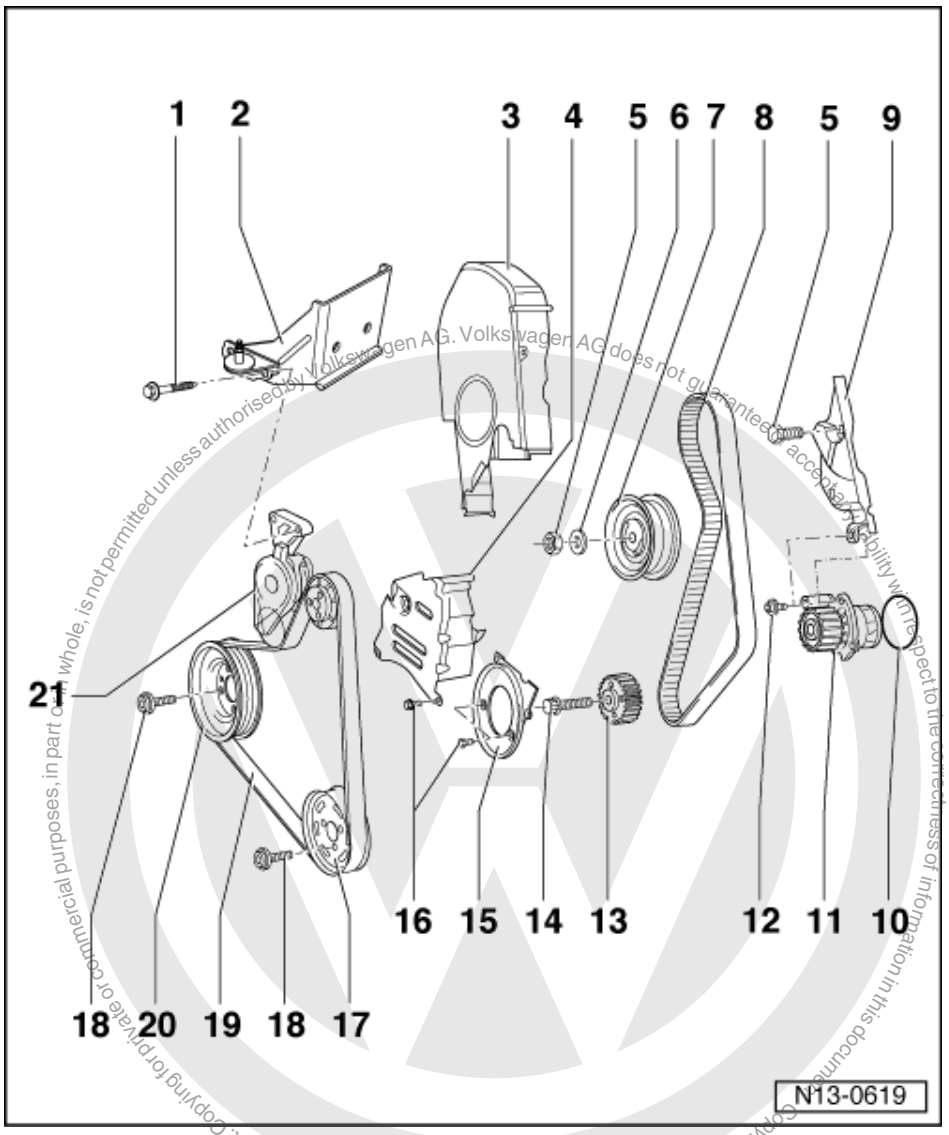


14 90 Nm + 1/4 turn (90 °) further

- Renew
- Threads and shoulder must be free of oil and grease
- Counter-hold with 3415 to loosen and tighten

15 Toothed belt guard - lower part

16 10 Nm

17 Pulley

- For power assisted steering pump

18 25 Nm

19 Ribbed belt

- Mark direction of rotation before removing
- Removing and installing
  => Page 26

Copyright by Volkswagen AG. Volkswagen AG does not guarantee or accept any liability with respect to the correctness of information in this document. Copying for private or commercial purposes, in part or whole, is not permitted unless authorised by Volkswagen AG.
satelettronica

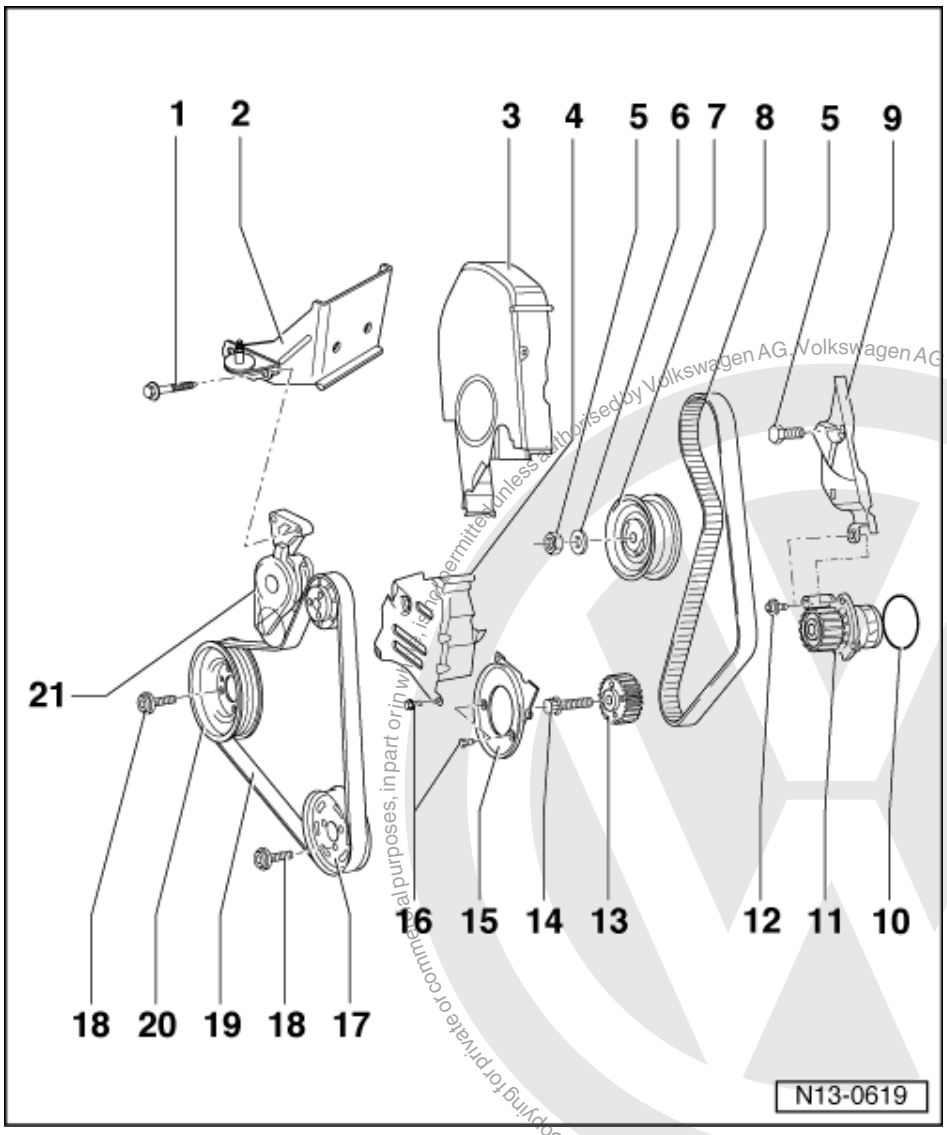


20 Belt pulley/vibration damper

- Can only be installed in one position. Holes are off-set
- Note position when installing toothed belt
  => Page 55 , Removing, installing and tensioning toothed belt

21 Tensioning device for ribbed belt

- Turn using a 16 mm open jaw spanner to slacken ribbed belt => Page 26 , Removing and installing ribbed belt

Volkswagen AG does not guarantee or accept any liability with respect to the correctness of information in this document. Copyright by Volkswagen AG.
Protected by copyright. Copying for private or commercial purposes, in part or in whole, is not permitted unless authorised by Volkswagen AG.
satelettronica

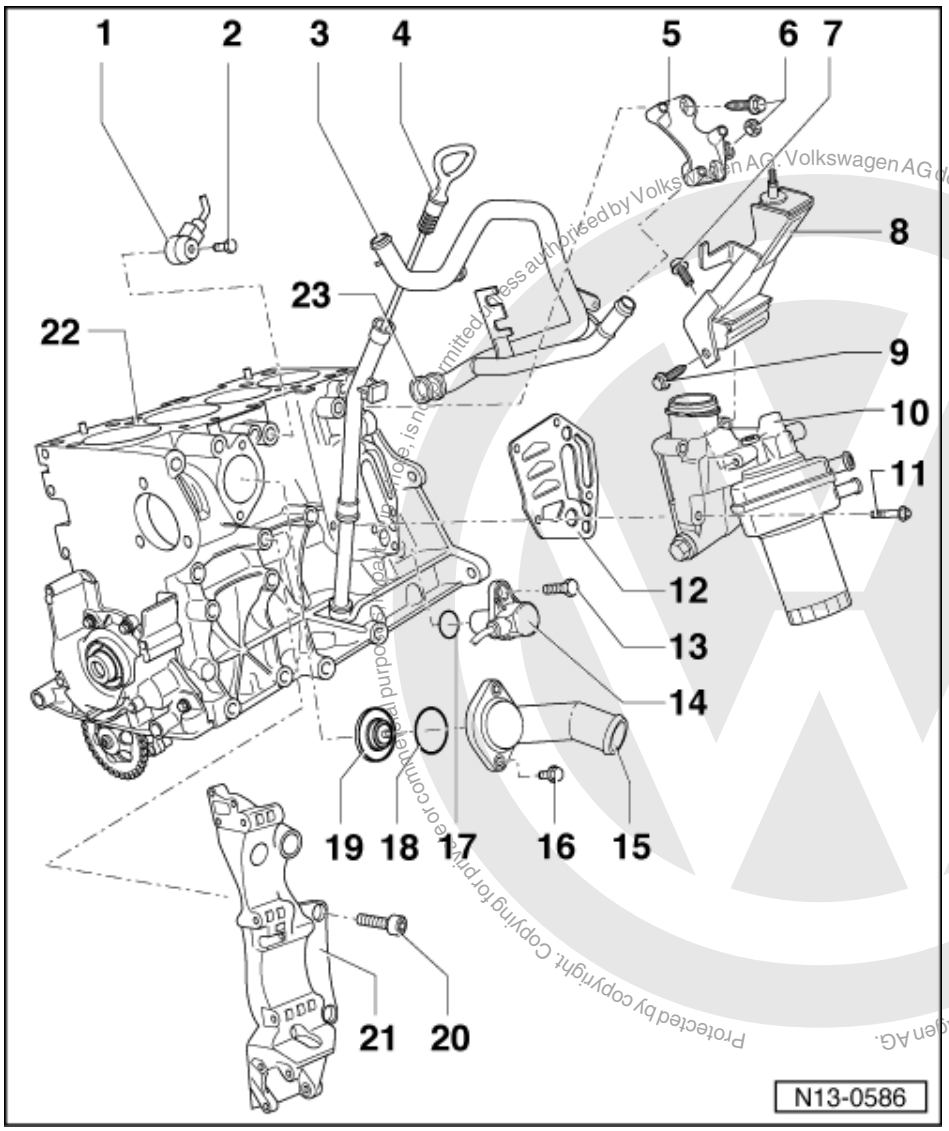


Part II

1 Knock sensor 1 (G61)
- Checking:

=> Repair Group 01; Fault memory; Interrogating and erasing engine control unit fault memory Fault memory Interrogating and erasing engine control unit fault memory

2 20 Nm
- Tightening torque influences the function of the knock sensor

3 Coolant pipe

4 Dipstick
- The oil level must not be above the max. mark!
- Markings=> Page 92 , Fig. 1

5 Bracket
- For ignition coils

6 10 Nm

Protected by copyright. Copying for private or commercial purposes, is not permitted unless authorised by Volkswagen AG. Volkswagen AG does not guarantee or accept any liability with respect to the correctness of information in this document. Copyright by Volkswagen AG.
satelettronica

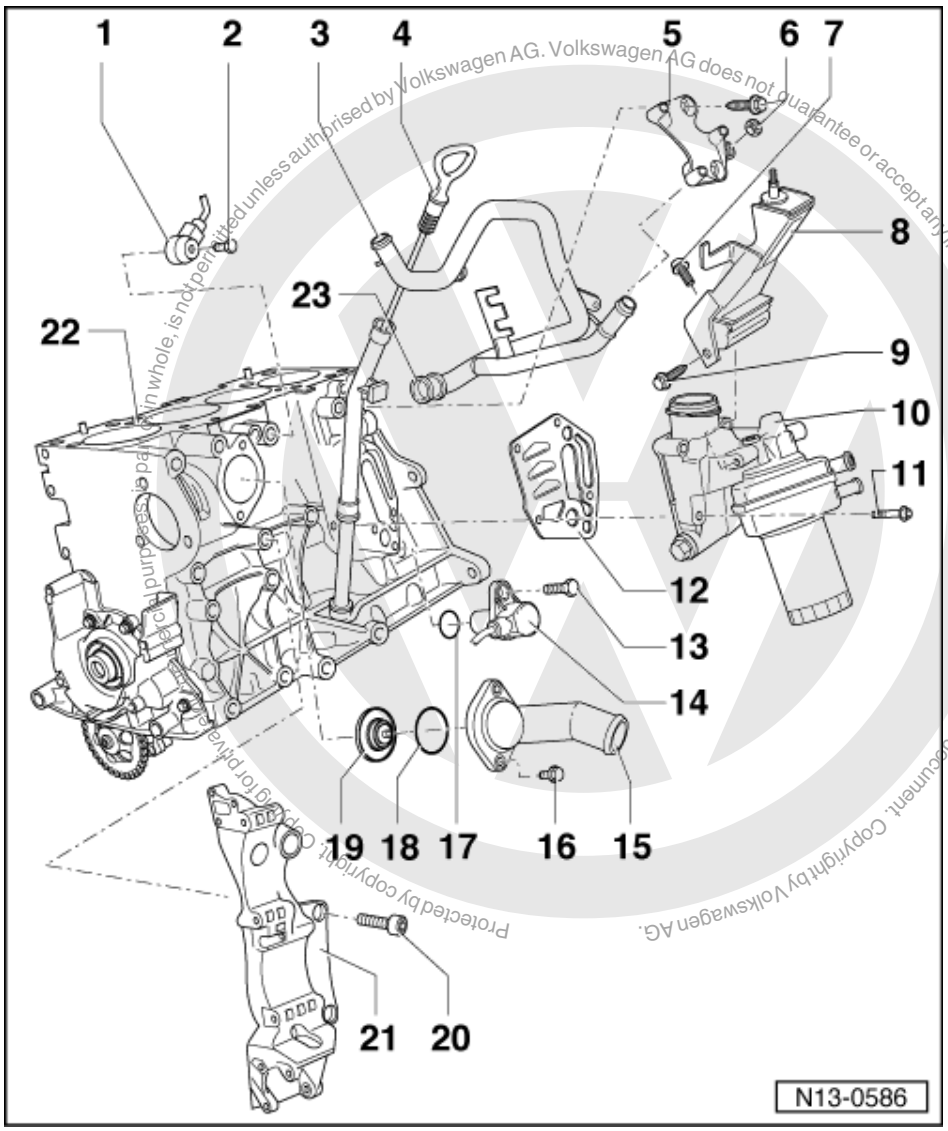


Protected by copyright. Copying for private or commercial purposes, in whole, is not permitted unless authorised by Volkswagen AG. Volkswagen AG does not guarantee or accept any liability with respect to the correctness of information in this document. Copyright by Volkswagen AG.

7 Securing screw
- Engine codes AEH, AKL tighten to 20 Nm
- Engine codes APF, AUR tighten to 10 Nm

8 Bracket
- various designs possible

9 Securing screw
- Engine codes AEH, AKL tighten to 10 Nm
- Engine codes APF, AUR tighten to 6 Nm

10 Oil filter bracket with attached parts
- Dismantling and assembling
  => Page 89

11 15 Nm + 1/4 turn (90 °) further
- Renew

12 Gasket
- Renew

satelettronica

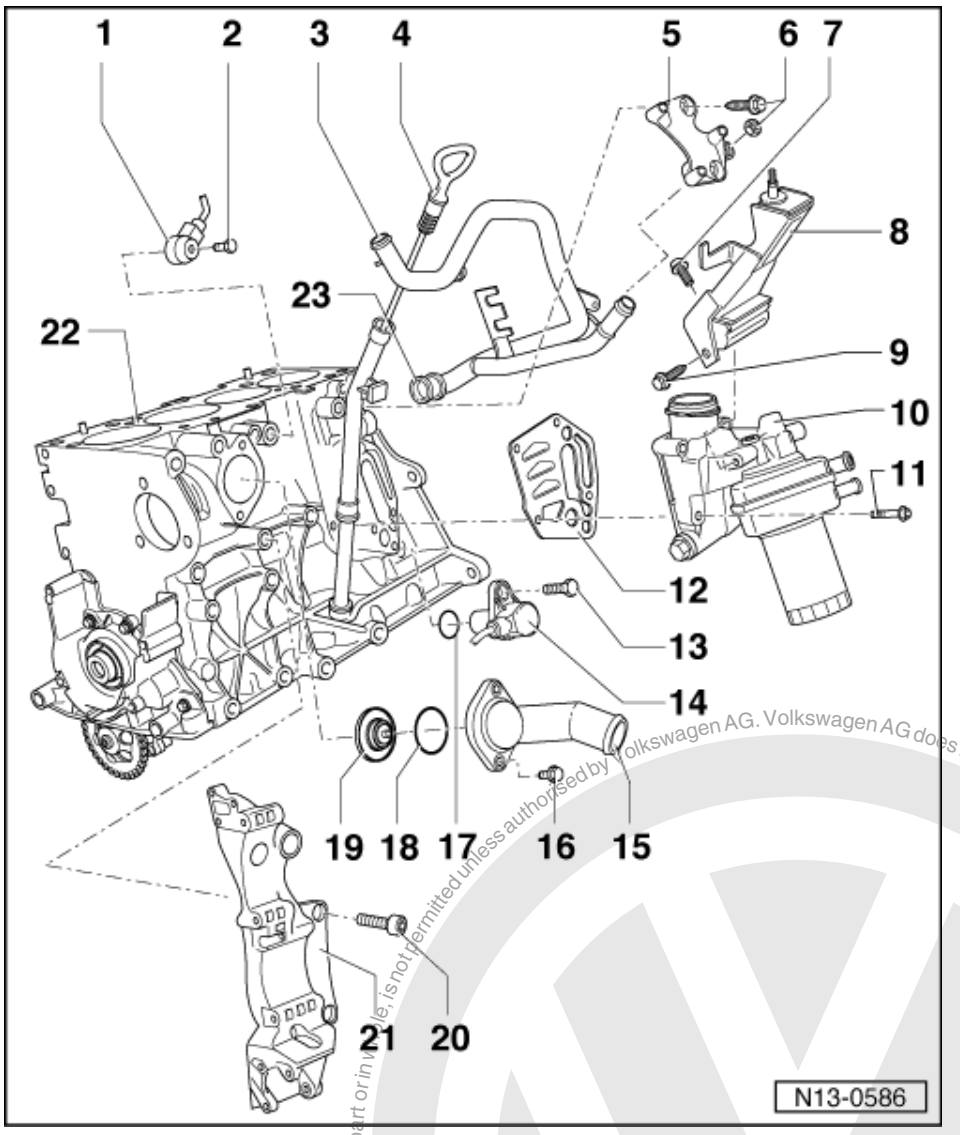


13 10 Nm

14 Engine speed sender

- Checking:

=> Repair Group 01; Fault memory; Interrogating and erasing engine control unit fault memory Fault memory Interrogating and erasing engine control unit fault memory

15 Connection

16 15 Nm

17 O-ring

- Renew if damaged

18 O-ring

- Renew

Protected by copyright. Copying for private or commercial purposes, in part or in whole, is not permitted unless authorised by Volkswagen AG. Volkswagen AG does not guarantee or accept any liability with respect to the correctness of information in this document. Copyright by Volkswagen AG.
satelettronica

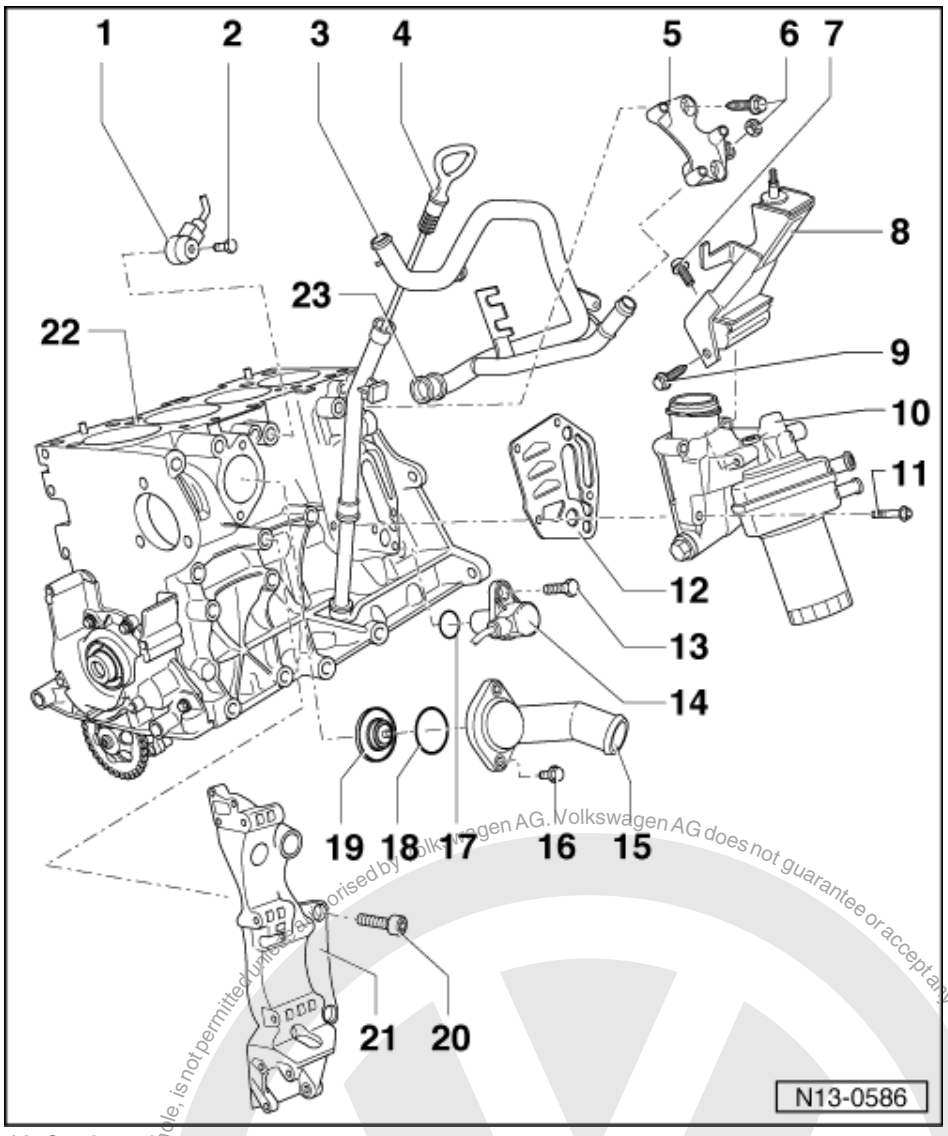


19 Coolant thermostat

- Removing and installing
  => Page 121
- Observe installation position,
  => Page 121 Removing and installing thermostat
- Checking: heat-up thermostat in water
- Opening commences approx. 85 °C
- Ends approx. 105 °C
- Opening lift min. 7 mm

20 45 Nm

21 Compact bracket

- For ribbed belt tensioning roller, alternator, P.A.S. vane pump and air conditioner compressor

Protected by copyright. Copying for private or commercial purposes, in any form or medium, is not permitted unless authorised by Volkswagen AG. Volkswagen AG does not guarantee or accept any liability with respect to the correctness of information in this document. Copyright by Volkswagen AG.
satelettronica

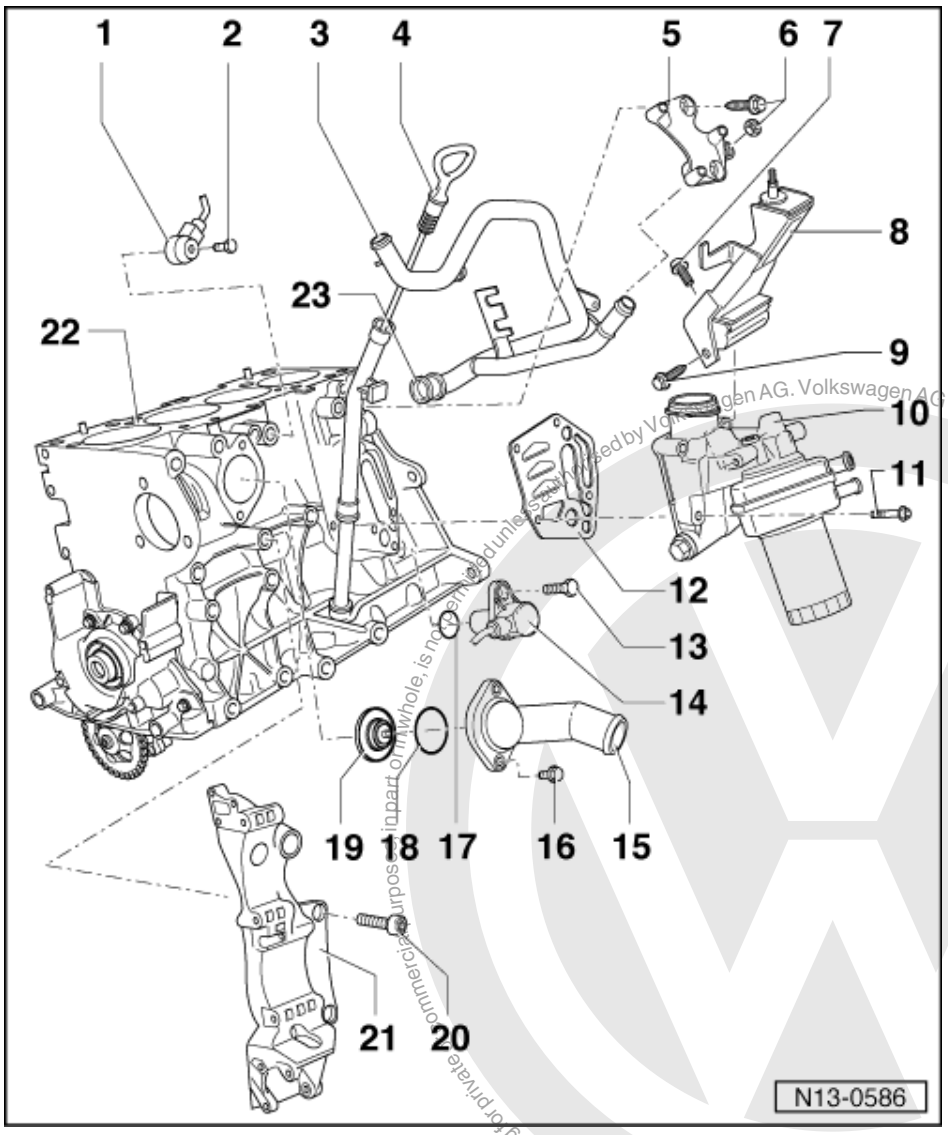


22 Cylinder block

- Removing and installing sealing flange and pressure plate/drive plate => Page 28
- Removing and installing crankshaft => Page 39
- Dismantling and assembling pistons and conrods => Page 44

23 O-ring

- Renew

Protected by copyright. Copying for private or commercial purposes, in part or in whole, is not permitted unless authorised by Volkswagen AG. Volkswagen AG does not guarantee or accept any liability with respect to the correctness of information in this document. Copyright by Volkswagen AG.
satelettronica

## 1.2 - Removing and installing ribbed belt

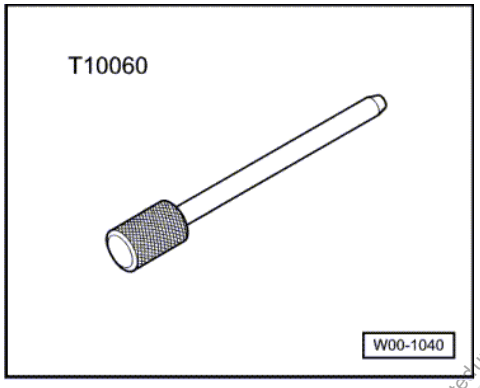


### Special tools, workshop equipment, testers, measuring instruments and auxiliary items required

- Retaining pin T10060
- Spanner 15 mm AF

### Work sequence

- Remove noise insulation tray:
- Remove windscreen washer reservoir.
- Mark direction of rotation of ribbed belt.

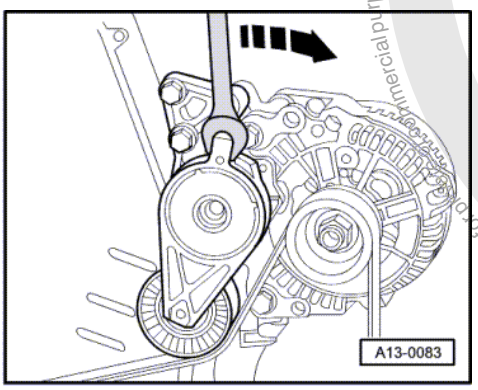


- -> To slacken ribbed belt turn tensioning element with a 16 mm spanner in direction of arrow.

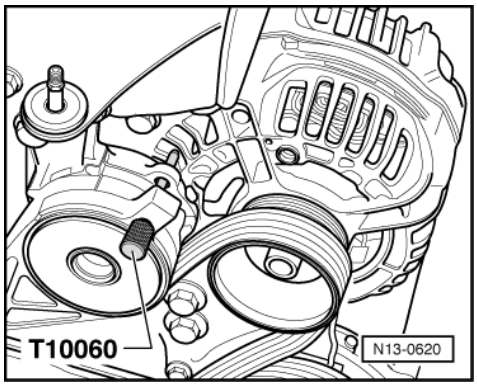


- -> Lock tensioning element with retaining pin T10060.
- Remove ribbed belt.

### Installing ribbed belt

- Install in reverse order.

Protected by copyright. Copying for commercial purposes, part or in whole, is not permitted unless authorised by Volkswagen AG. Volkswagen AG does not guarantee or accept any liability with respect to the correctness of information in this document. Copyright by Volkswagen AG.
satelettronica

*Notes:*

- Ensure, before installing ribbed belt, that all ancillaries (alternator, air conditioner compressor, power assisted steering vane pump) are secured tightly.
- When fitting the ribbed belt observe belt direction of rotation and that the belt is seated correctly in the belt pulleys.
- For vehicles without air conditioning, put ribbed belt over alternator last.
- For vehicles with air conditioning, put ribbed belt over air conditioning compressor last.

After completing repairs always:

- Start engine and check belt running.

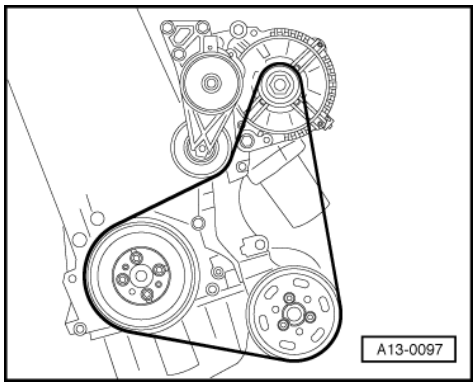


-> Belt drive without air conditioner compressor

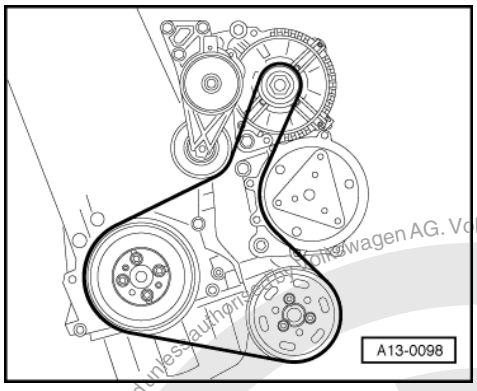


-> Belt drive with air conditioner compressor

Protected by copyright. Copying for private or commercial purposes, in part or in whole, is not permitted unless authorised by Volkswagen AG. Volkswagen AG does not guarantee or accept any liability with respect to the correctness of information in this document. Copyright by Volkswagen AG.
satelettronica

# 2 - Removing and installing sealing flange and pressure plate/drive plate

## 2.1 - Removing and installing sealing flange and pressure plate/drive plate

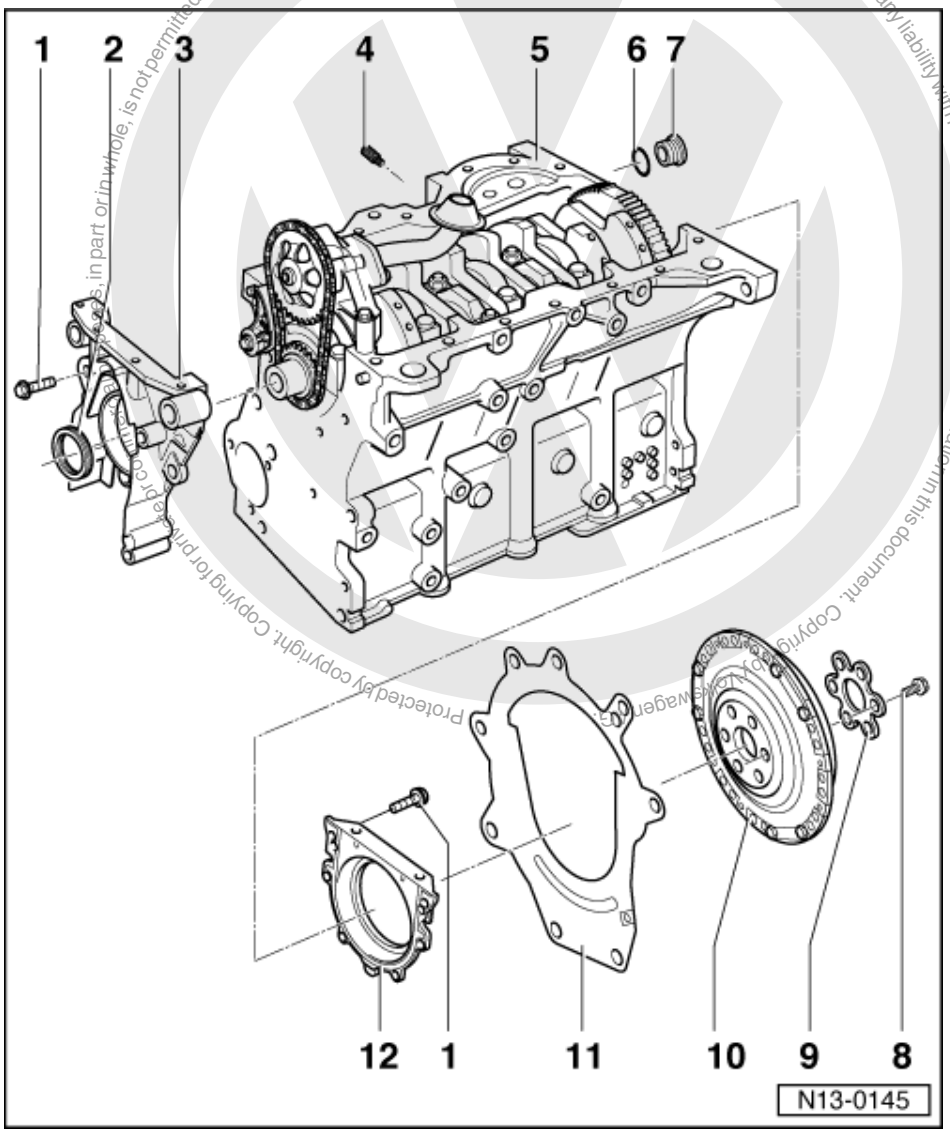


*Note:*

*For repairs to the clutch:*

=> 5-Speed manual gearbox 02K; Repair group 30; Servicing clutch Servicing clutch

1 15 Nm
2 Oil seal
- Renewing => Page 31

3 Front sealing flange
- Must be located on dowel sleeves
- Removing and installing
  => Page 34
- To remove and install remove sump

4 Threaded pin, 10 Nm

satelettronica

- Renew

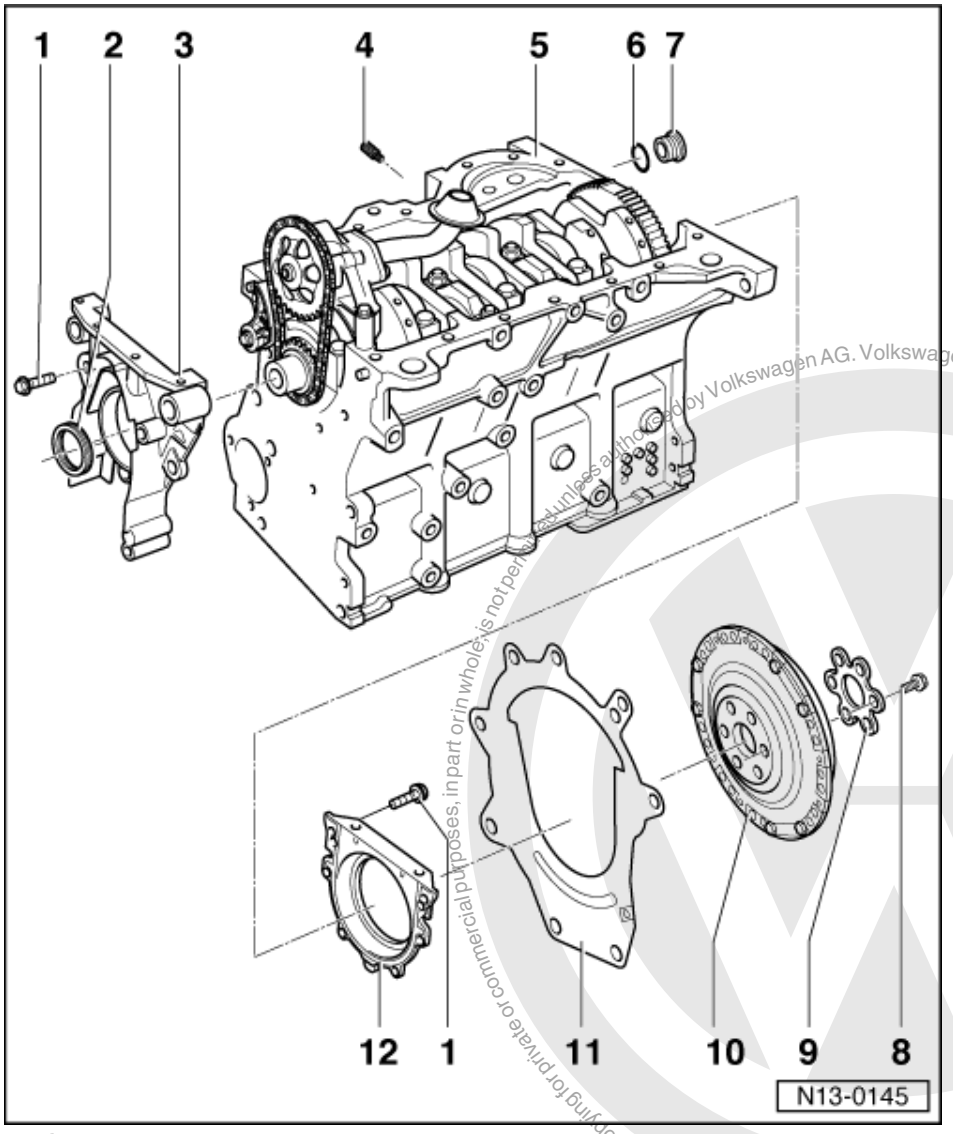


5 Cylinder block
- Removing and installing crankshaft => Page 39
- Dismantling and assembling pistons and conrods => Page 44

6 Oil seal
- Fitted permanently on -item 7 -

7 100 Nm

8 60 Nm + 1/4 turn (90 °) further
- Renew

9 Plate
- Observe fitting position

10 Pressure plate/drive plate
- To remove and install lock pressure plate with VW 558
- Removing and installing drive plate =>Page 36

Protected by copyright. Copying for private or commercial purposes, in part or in whole, is not permitted unless authorised by Volkswagen AG. Volkswagen AG does not guarantee or accept any liability with respect to the correctness of information in this document. Copyright by Volkswagen AG.
satelettronica

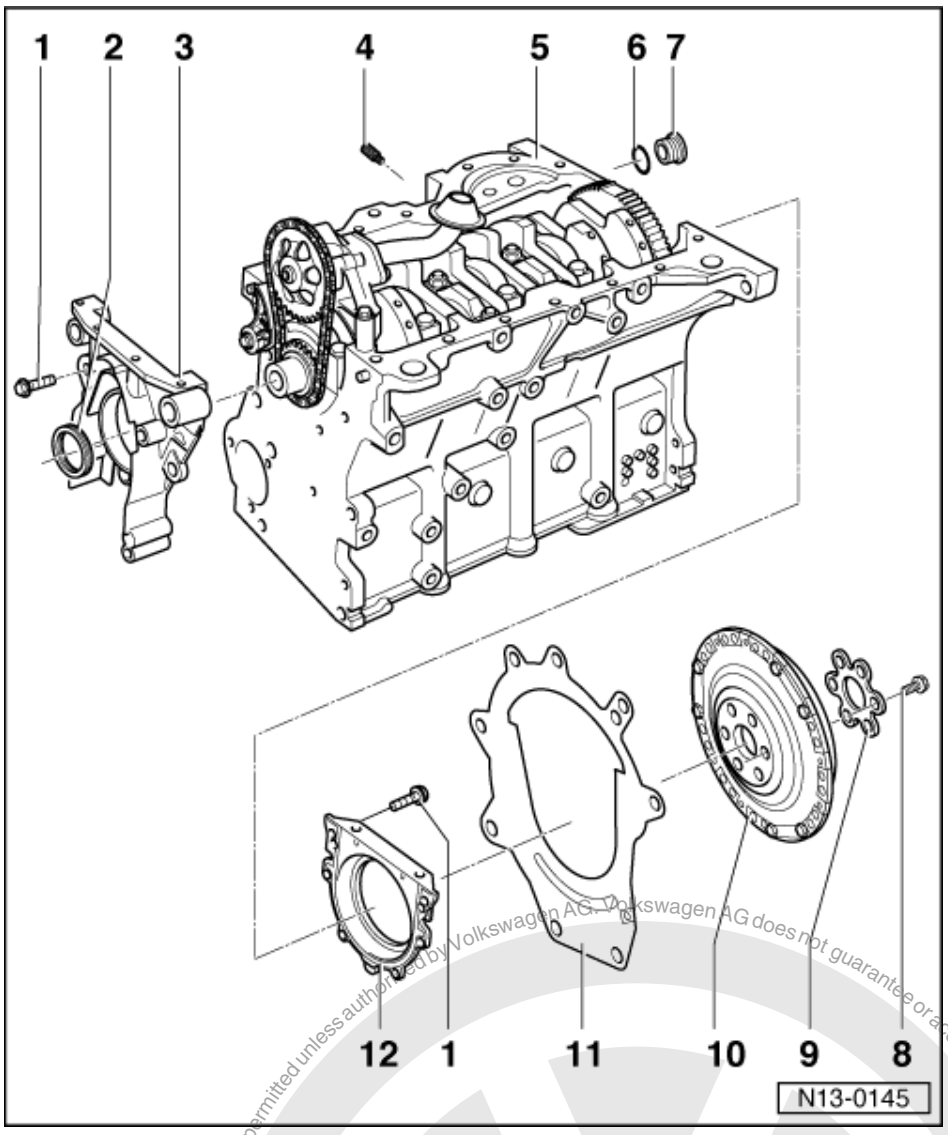


11 Intermediate plate

- Must be located on dowel sleeves
- Do not damage/bend when assembling

12 Sealing flange with oil seal

- Only renew complete
- Use protective sleeve supplied when installing
- To remove and install remove sump
- Do not additionally oil or grease the oil seal sealing lip
- Before installing, remove oil remains from crankshaft journal with a clean cloth
- Remove protective sleeve first after sealing flange has been slid onto crankshaft journal

Protected by copyright. Copying for private or commercial purposes, in whole or in part, is not permitted unless authorised by Volkswagen AG. Volkswagen AG does not guarantee or accept any liability with respect to the correctness of information in this document. Copyright by Volkswagen AG.
satelettronica

## 2.2 - Renewing crankshaft oil seal -belt pulley end

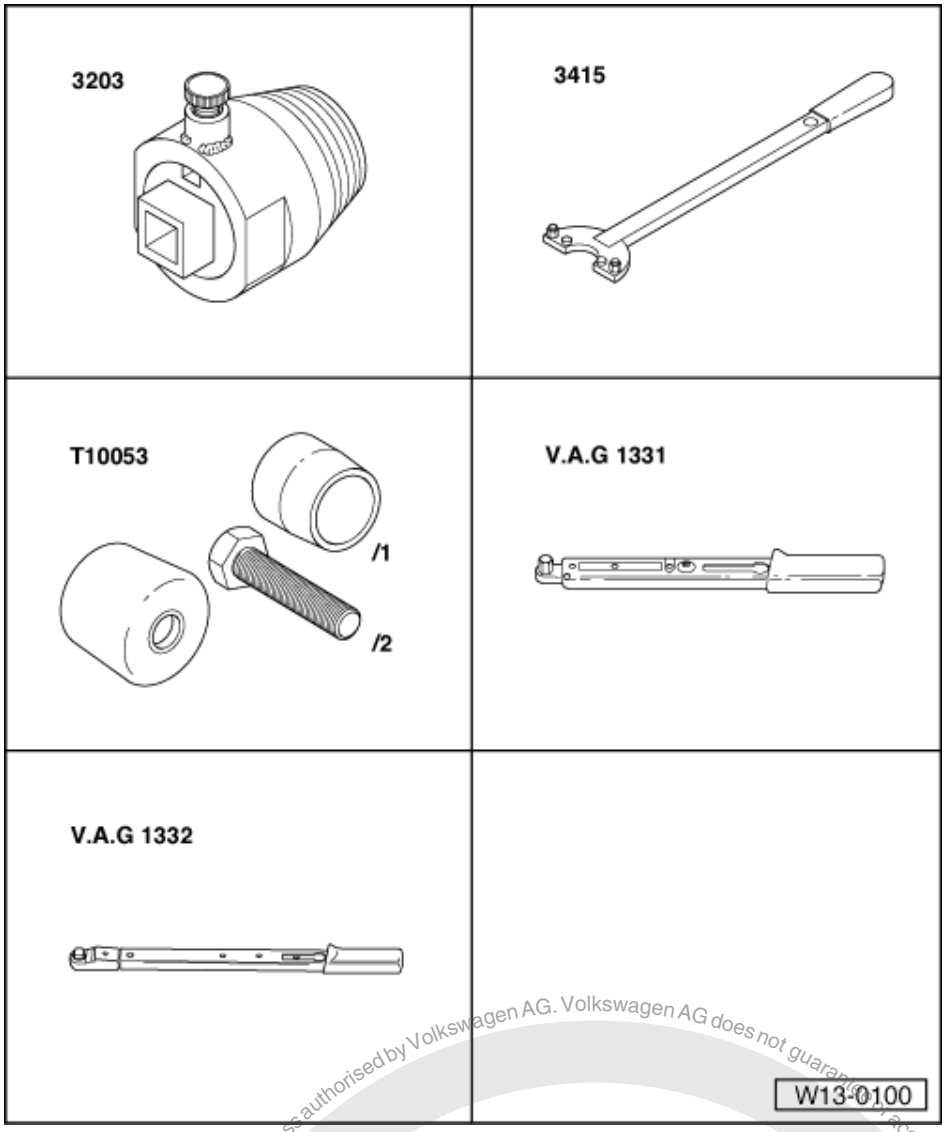


**Special tools, workshop equipment, test and measuring appliances and auxiliary items required**

- 3203 Oil seal extractor
- 3415 Counter-hold tool
- T10053 Assembly device
- V.A.G 1331 Torque wrench (5...50 Nm)
- V.A.G 1332 Torque wrench (40...200 Nm)

Protected by copyright. Copying for private or commercial purposes, in part or in whole, is not permitted unless authorised by Volkswagen AG. Volkswagen AG does not guarantee or accept any liability with respect to the correctness of information in this document. Copyright by Volkswagen AG.
satelettronica

Removing

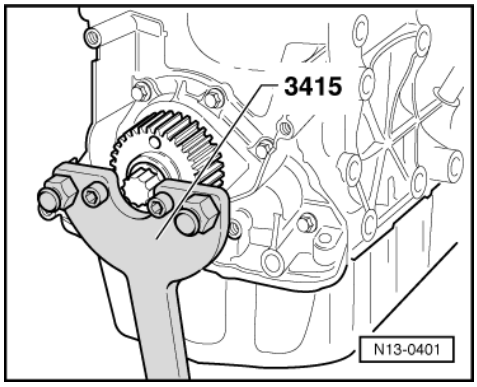


- Remove ribbed belt => Page 26 .
- Remove toothed belt => Page 55 .
- -> Remove crankshaft toothed belt sprocket. To do this counter-hold sprocket with 3415.

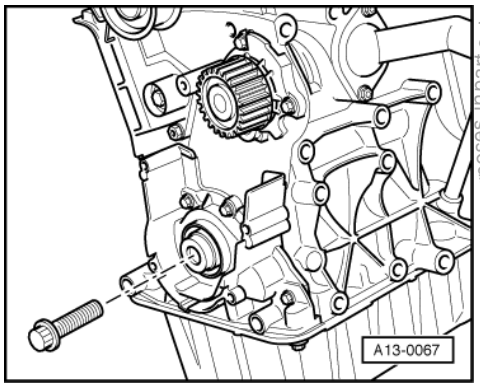


- -> To guide seal extractor, screw centre bolt into crankshaft onto stop by hand.
- Unscrew inner part of oil seal extractor 3203 nine turns (approx. 20 mm) out of the outer part and lock with knurled screw.

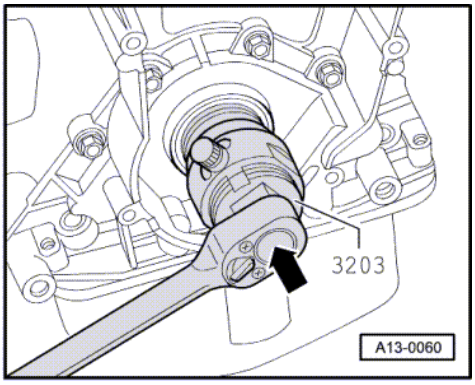


- -> Lubricate threaded head of oil seal extractor 3203, place it in position and exerting firm pressure screw it as far as possible into oil seal.
- Loosen knurled screw and turn inner part against crankshaft until the oil seal is pulled out.

Installing

*Note:*

*Gradual introduction of PTFE oil seal (identifying characteristics: no annular spring, sealing lip wider). The sealing lip of this oil ring must not be oiled or lubricated. A plain encased seal of older construction (with annular spring) may be replaced with a PTFE oil seal, but not vice versa.*

Protected by copyright. Copyright by Volkswagen AG.
Copyright by Volkswagen AG. Volkswagen AG does not guarantee or accept any liability with respect to the correctness of information in this document. Copying for private or commercial purposes, in part or in whole, is not permitted unless authorised by Volkswagen AG.
satelettronica

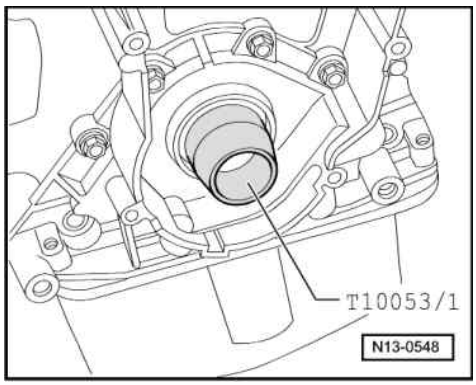


- Before installing, remove oil remains from crankshaft journal with a clean cloth.
- -> Fit guide sleeve T10053/1 onto crankshaft journal.
- Slide oil seal over guide sleeve onto crankshaft stub.

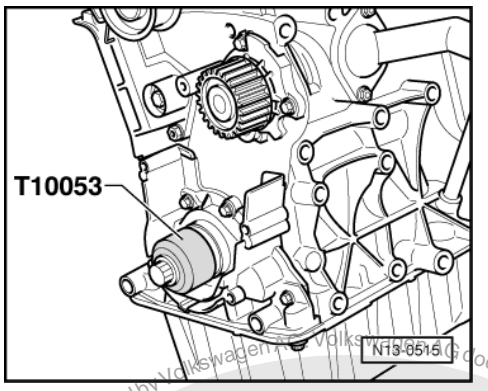


- -> Press in oil seal onto stop using press sleeve T10053 and bolt T10053/2 (M16 x 1.5 x 60).

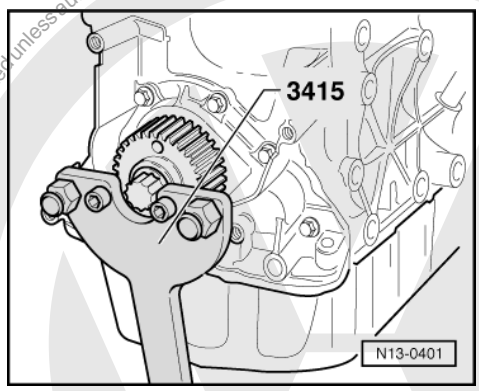


- -> Install crankshaft sprocket and counter-hold with 3415.
  Tightening torque: 90 Nm + 1/4 turn (90 °) further

***Note:***

*Thread and shoulder must be free of oil and grease.*

Installing toothed belt and adjusting valve timing => Page 55 .

- Install ribbed belt => Page 26 .

Protected by copyright. Copying for private or commercial purposes, in part or in whole, is not permitted unless authorised by Volkswagen AG. Volkswagen AG does not guarantee or accept any liability with respect to the correctness of information in this document. Copyright by Volkswagen AG.
satelettronica

## 2.3 - Removing and installing front sealing flange

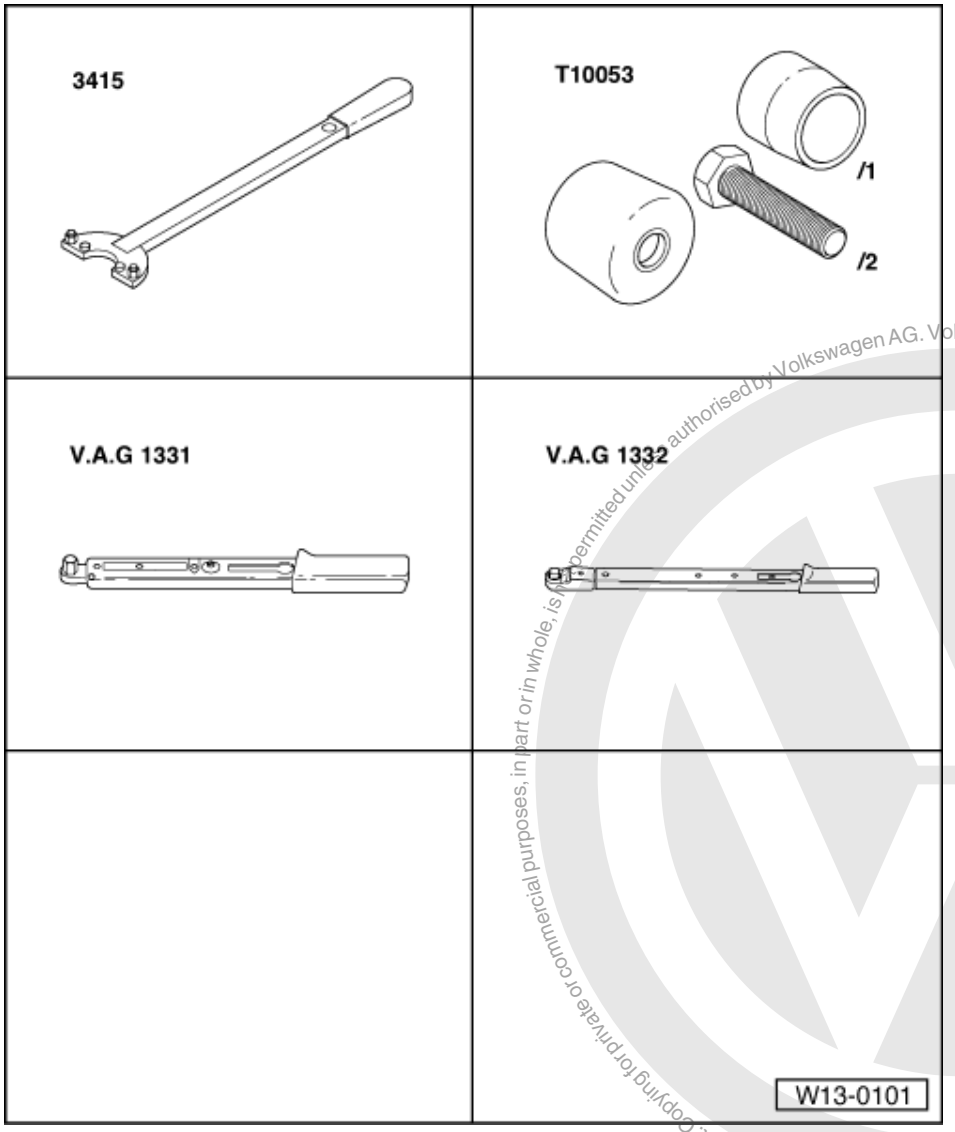


**Special tools, workshop equipment, test and measuring appliances and auxiliary items required**

- 3415 Counter-hold tool
- T10053 Assembly device
- V.A.G 1331 Torque wrench (5...50 Nm)
- V.A.G 1332 Torque wrench (40...200 Nm)
- Hand drilling machine with plastic brush insert
- D176404 A2 Silicone sealant
- Flat scraper

Protected by copyright. Copying for private or commercial purposes, in part or in whole, is not permitted unless authorised by Volkswagen AG. Volkswagen AG does not guarantee or accept any liability with respect to the correctness of information in this document. Copyright by Volkswagen AG.
satelettronica

## Removing

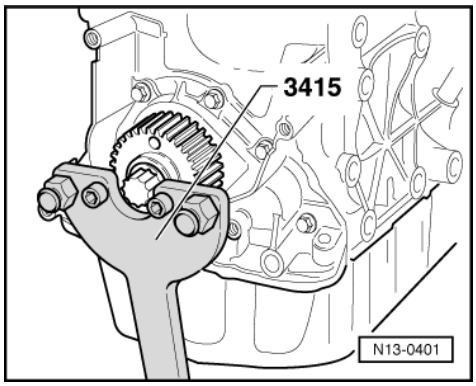


- Remove ribbed belt => Page 26 .
- Remove toothed belt => Page 55 .
- -> Remove crankshaft toothed belt sprocket. To do this counter-hold sprocket with 3415.
- Drain engine oil.
- Remove sump => Page 92 .
- Unbolt front sealing flange.
- Take off sealing flange, release using light blows with a rubber headed hammer if necessary.

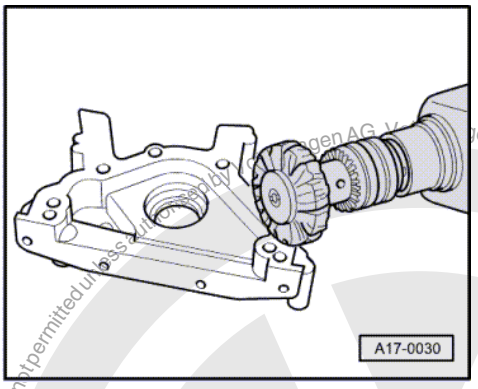


- Remove sealant residue on cylinder block with a flat scraper.
- Cover seal with a clean rag.
- -> Remove sealant remains on sealing flange with a rotating plastic brush (wear protective goggles).
- Clean sealing surface, must be free of oil and grease.

## Installing

***Notes:***

- Note the use by date of the sealant.
- The sealing flange must be installed within 5 minutes of applying the silicone sealant.

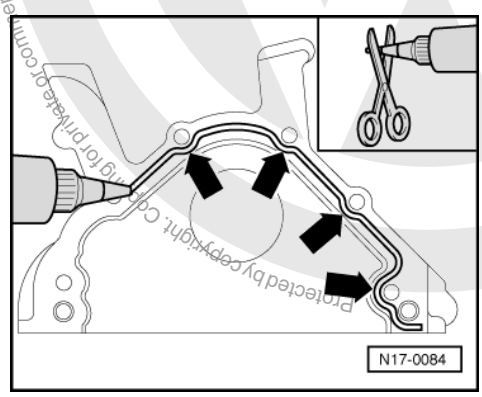


- -> Cut off tube nozzle at forward marking (nozzle approx. 3 mm ø).

satelettronica

- Apply silicone sealing compound, as shown, to clean sealing surface of the sealing flange. Sealing compound bead must be:

*Notes:*

- Thickness of sealing bead -arrows-: 2 ... 3 mm
- The sealing bead must not be thicker, otherwise excessive sealant may drip into the oil sump, the intake pipe oil strainer may be blocked and it could also drip onto the sealing surface of crankshaft seal.
- Cover the sealing surface of the oil seal with a clean cloth before applying the sealant.

- Fit sealing flange immediately and lightly tighten all bolts.

*Note:*

*Use guide sleeve T10053/1 to fit sealing flange with the oil seal already installed.*

- Tighten sealing flange securing bolts using alternate sequence.
  Tightening torque:15 Nm
- Remove excess sealant
- Install sump => Page 92 .

*Note:*

*After installing, the sealant must be allowed to dry for approx. 30 minutes before engine oil is replenished.*

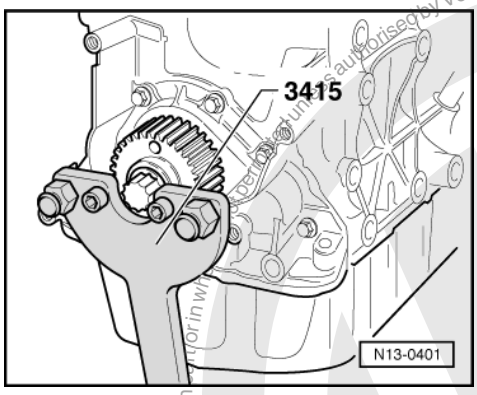


- -> Install crankshaft sprocket and counter-hold with 3415.
  Tightening torque: 90 Nm + 1/4 turn (90 °) further

*Note:*

*Thread and shoulder must be free of oil and grease.*

Installing toothed belt and adjusting valve timing => Page 55 .

- Install ribbed belt => Page 26 .

## 2.4 - Removing and installing drive plate

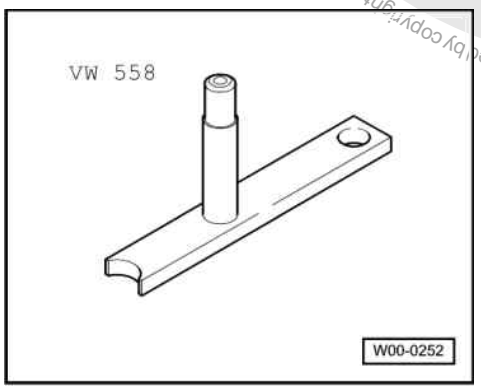


Protected by copyright. Copyright by Volkswagen AG. Volkswagen AG does not guarantee or accept any liability with respect to the correctness of information in this document. Copying for private or commercial purposes, in part or in whole, is not permitted unless authorised by Volkswagen AG.
satelettronica

Special tools, workshop equipment, testers, measuring instruments and auxiliary items required

- VW 558 Counter-hold tool
- Hexagon bolt M8x45 and two M10 hexagon nuts
- Depth gauge

Loosening and tightening drive plate

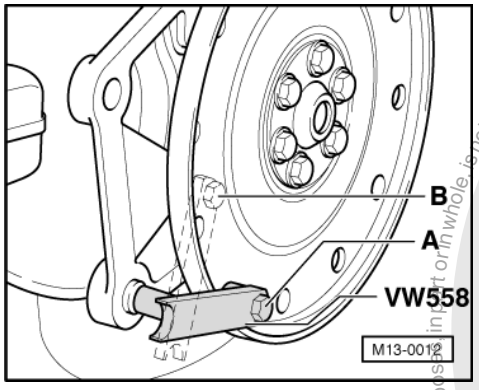


- -> Secure counter-hold tool VW 558 to the drive plate with a hexagon bolt M8x45. Place two M10 hexagon nuts between counter-hold tool and drive plate.

  Position of counter-hold tool:
  A - To loosen
  B - To tighten

Installing drive plate

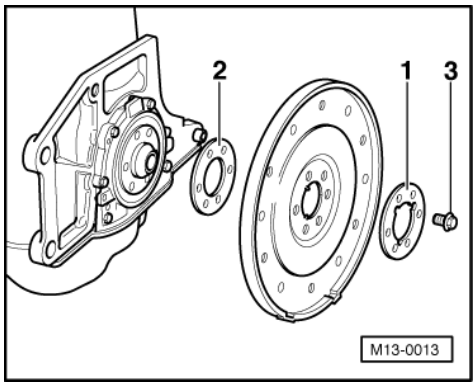


- -> Locate drive plate and packing plate with recesses -1-.
- Fit new bolts -3- and tighten to
  30 Nm.

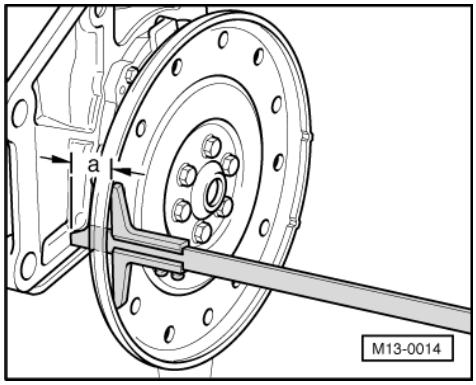


- -> Check dimension -a- at three points and calculate average.

Protected by copyright. Copyright for private or commercial purposes in part or in whole is not permitted unless authorised by Volkswagen AG. Volkswagen AG does not guarantee or accept any liability with respect to the correctness of information in this document. Copyright by Volkswagen AG.
satelettronica

Specification: 19.5...21.1 mm

***Note:***

*Measured through hole in drive plate to milled surface of cylinder block.*

If the specification is not attained:

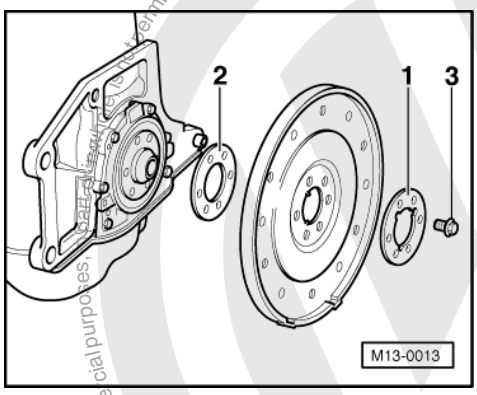


- -> Remove drive plate again and fit shim -2-. Again tighten bolts -3- to 30 Nm.
- Tighten bolts to 60 Nm and turn 90° (1/4 turn) further (turning further can be done in several stages).

Protected by copyright. Copying for private or commercial purposes, in part or in whole, is not permitted unless authorised by Volkswagen AG. Volkswagen AG does not guarantee or accept any liability with respect to the correctness of information in this document. Copyright by Volkswagen AG.
satelettronica

# 3 - Removing and installing crankshaft

## 3.1 - Removing and installing crankshaft

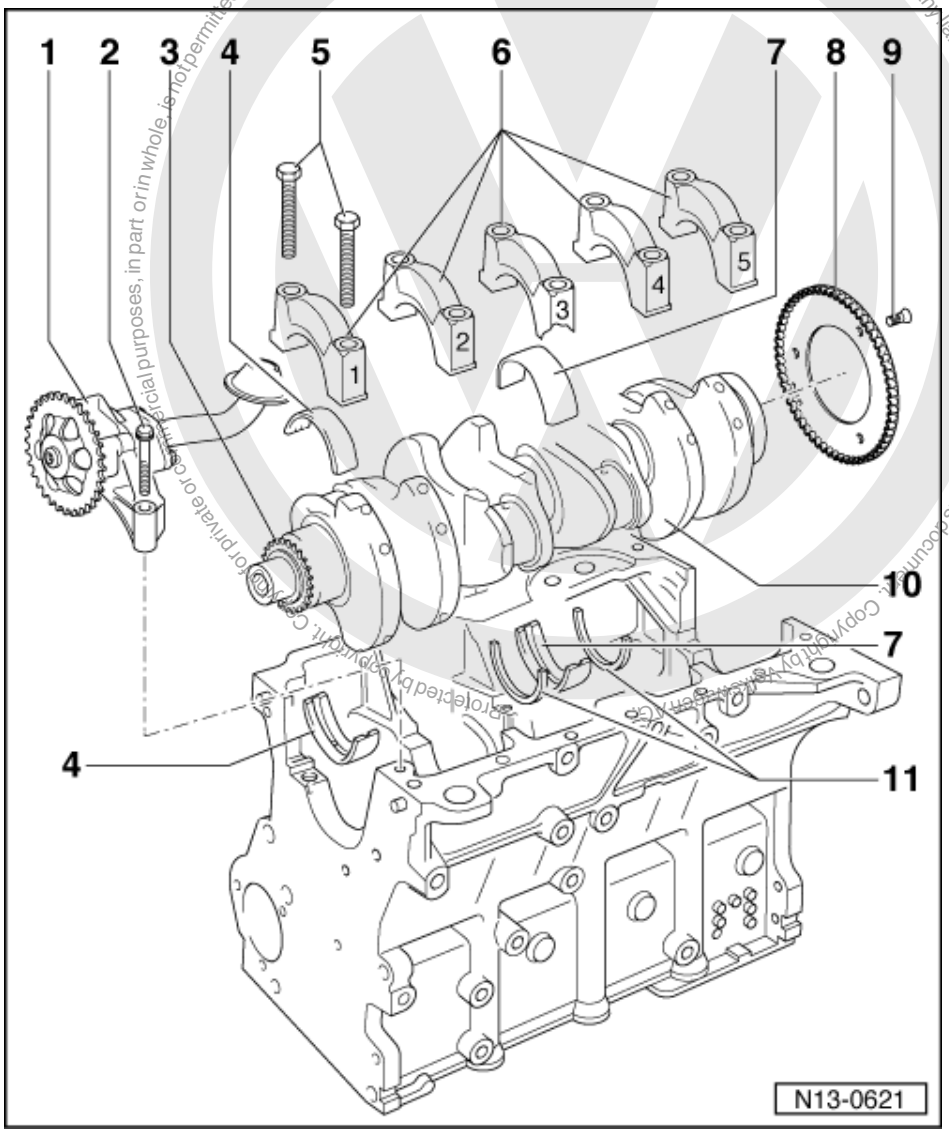


*Notes:*

- Before removing the crankshaft, prepare a suitable surface so that the sender wheel (item 8 ) is not making contact with anything and is not damaged.
- When stripping and assembling the engine it should be secured to the engine frame with engine and gearbox bracket VW 540 and supplementary set VW 540/1B.

1 Oil pump
- Removing and installing
  => Page 84

2 15 Nm

3 Chain sprocket
- For oil pump drive

satelettronica

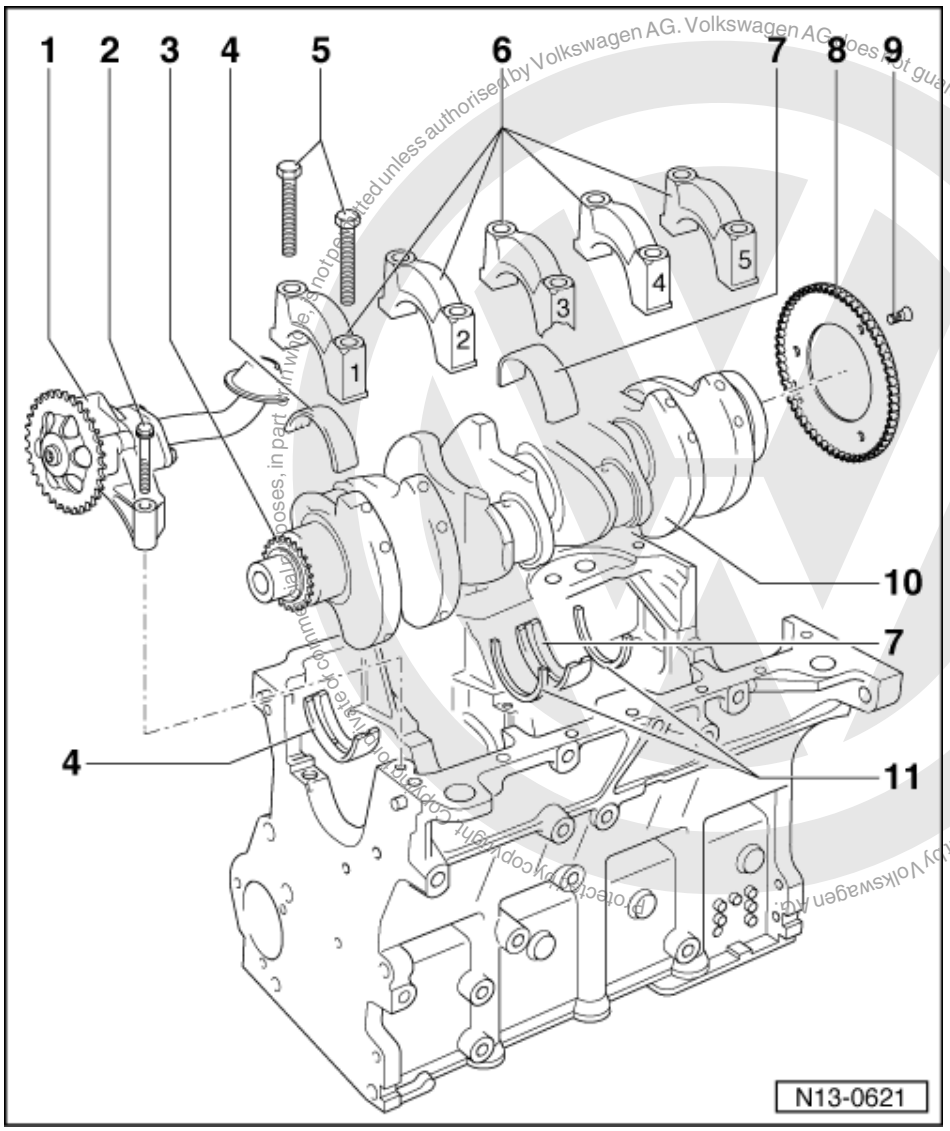


Copyright by Volkswagen AG. Volkswagen AG does not guarantee or accept any liability with respect to the correctness of information in this document. Copyright by Volkswagen AG. Protected by copyright. Copying for private or commercial purposes, in part or in whole, is not permitted unless authorised by Volkswagen AG.

4 **Bearing shells 1, 2, 3, 4 and 5**
- Classification for ordering spare parts =>Page 42 , Fig. 1
- For bearing cap without oil groove
- For cylinder block with oil groove
- Do not interchange used bearing shells (mark)

5 **40 Nm + 90 ° (1/4 turn) further**
- Renew
- Threaded along complete length (screw)
- Tighten to 40 Nm when measuring radial clearance

6 **Bearing cap**
- Bearing cap 1: Pulley end
- Bearing shell retaining lugs (cylinder block/bearing cap) must be on the same side

satelettronica

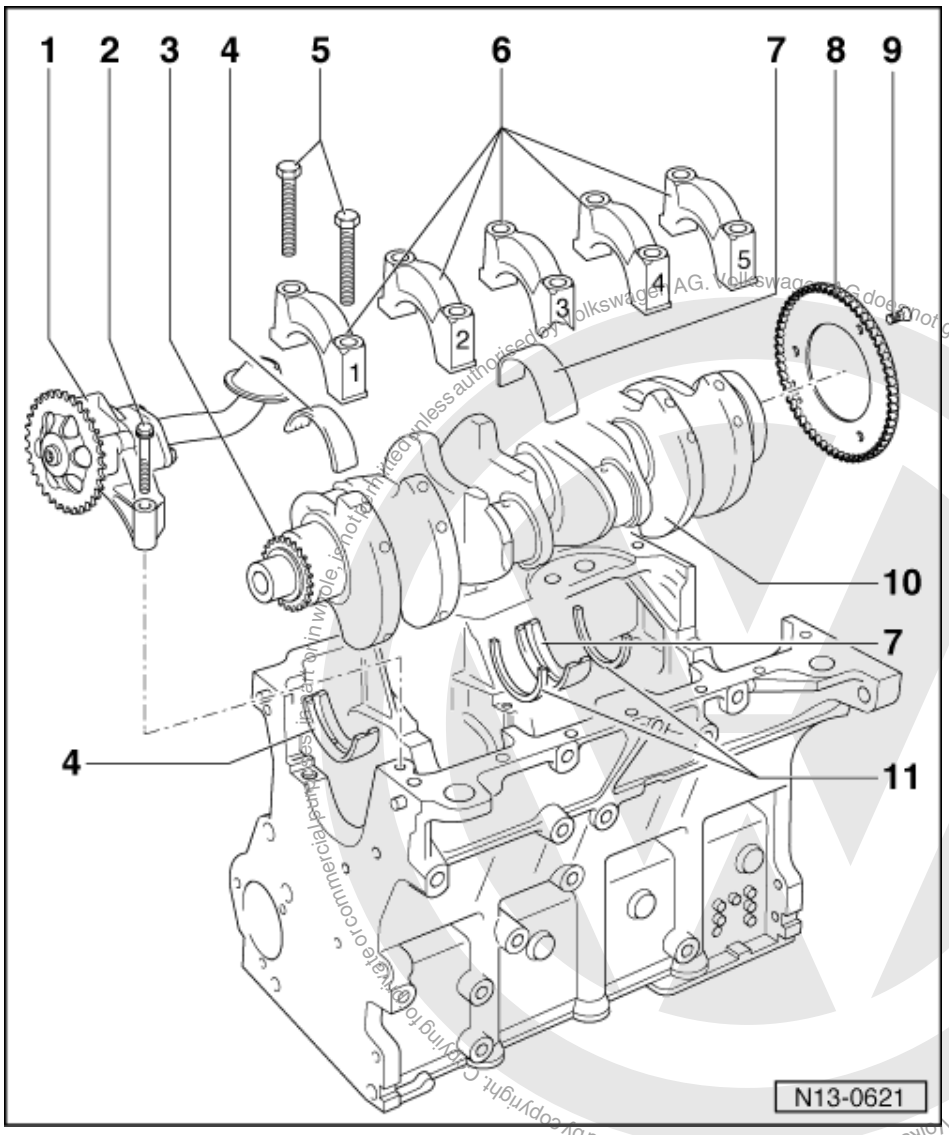


7 Bearing shell 3
- => Item 4
- Do not interchange used bearing shells (mark)

8 Sender wheel
- For engine speed sender (G28)
- Can only be installed in one position. Holes are off-set

9 10 Nm + 1/4 turn (90 °) further
- Renew

10 Crankshaft
- Axial clearance new: 0.07...0.23 mm
  Wear limit: 0.30 mm
- Check radial clearance with Plastigage
  New: 0.01...0.04 mm
  Wear limit: 0.15 mm
- Do not rotate the crankshaft when checking the radial clearance
- Crankshaft dimensions
  => Page 43

Protected by copyright. Copying for private or commercial purposes, in part or in whole, is not permitted unless authorised by Volkswagen AG. Volkswagen AG does not guarantee or accept any liability with respect to the correctness of information in this document. Copyright by Volkswagen AG.
satelettronica

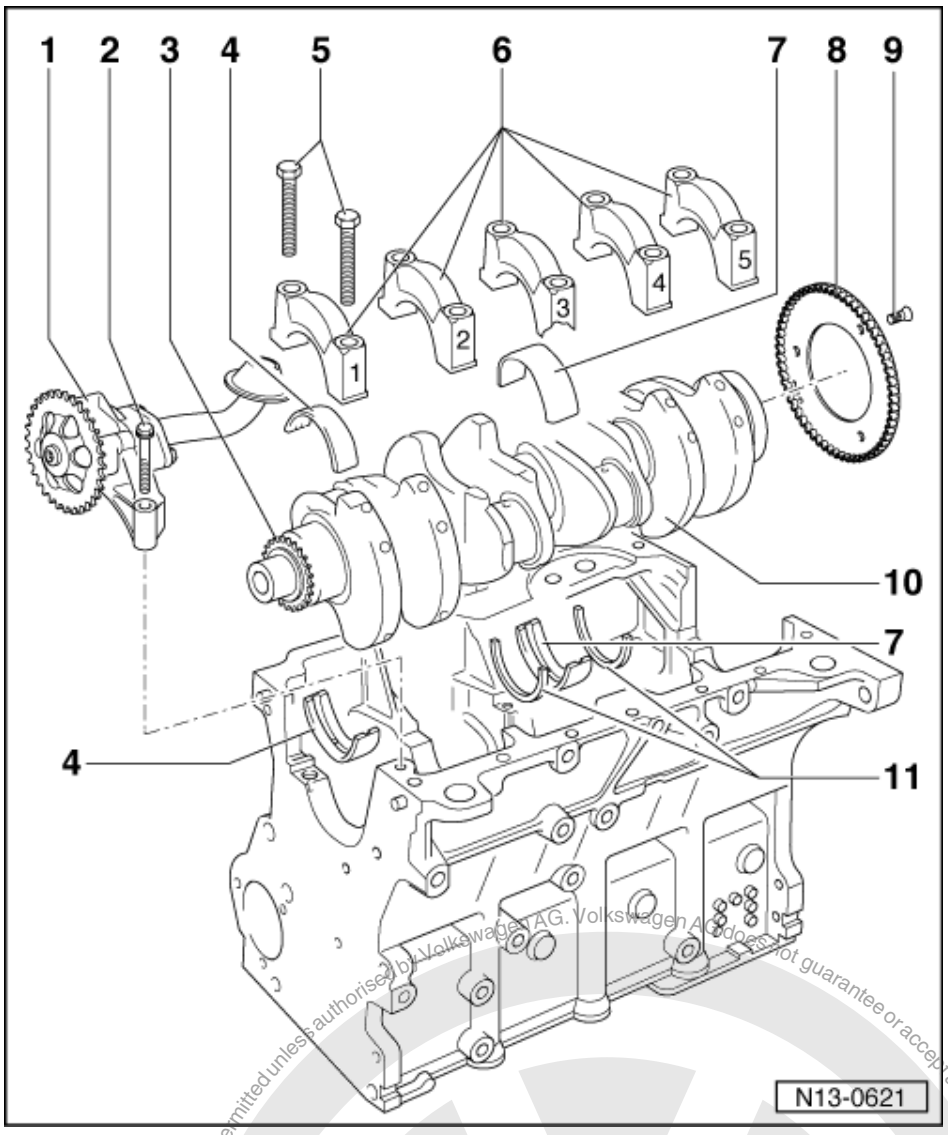


11 Thrust washer
- For cylinder block, bearing 3

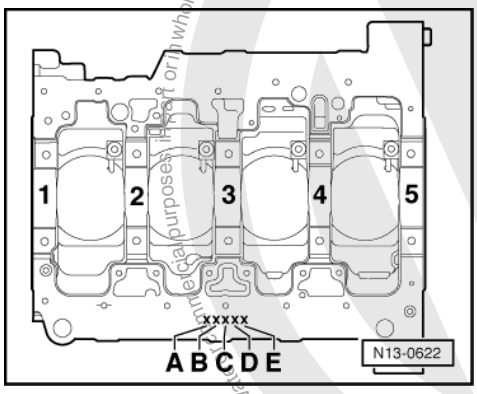


-> Fig. 1 Upper crankshaft bearing identification

- The upper bearing shell is classified at the factory and marked as shown on the cylinder block.

| | | |
|---|---|---|
| A | = | Marking for bearing 1 |
| B | = | Marking for bearing 2 |

satelettronica

| | | |
|---|---|---|
| C | = | Marking for bearing 3 |
| D | = | Marking for bearing 4 |
| E | = | Marking for bearing 5 |

## 3.2 - Colour markings

| | | |
|---|---|---|
| S | = | black |
| R | = | red |
| G | = | yellow |
| B | = | blue |

- The lower crankshaft bearing shells are always supplied as a spare part with the colour marking "yellow".

## 3.3 - Crankshaft dimensions

(in mm)

| Honing dimension | Main journal -ø | Conrod journal-ø |
|---|---|---|
| Basic dimension | -0.017<br>54.00<br>-0.037 | -0.022<br>47.80<br>-0.042 |
| 1st undersize | -0.017<br>53.75<br>-0.037 | -0.022<br>47.55<br>-0.042 |
| 2nd undersize | -0.017<br>53.50<br>-0.037 | -0.022<br>47.30<br>-0.042 |
| 3rd undersize | -0.017<br>53.25<br>-0.037 | -0.022<br>47.05<br>-0.042 |

Protected by copyright. Copying for private or commercial purposes, in part or in whole, is not permitted unless authorised by Volkswagen AG. Volkswagen AG does not guarantee or accept any liability with respect to the correctness of information in this document. Copyright by Volkswagen AG.
satelettronica

# 4 - Dismantling and assembling pistons and conrods

## 4.1 - Dismantling and assembling pistons and conrods

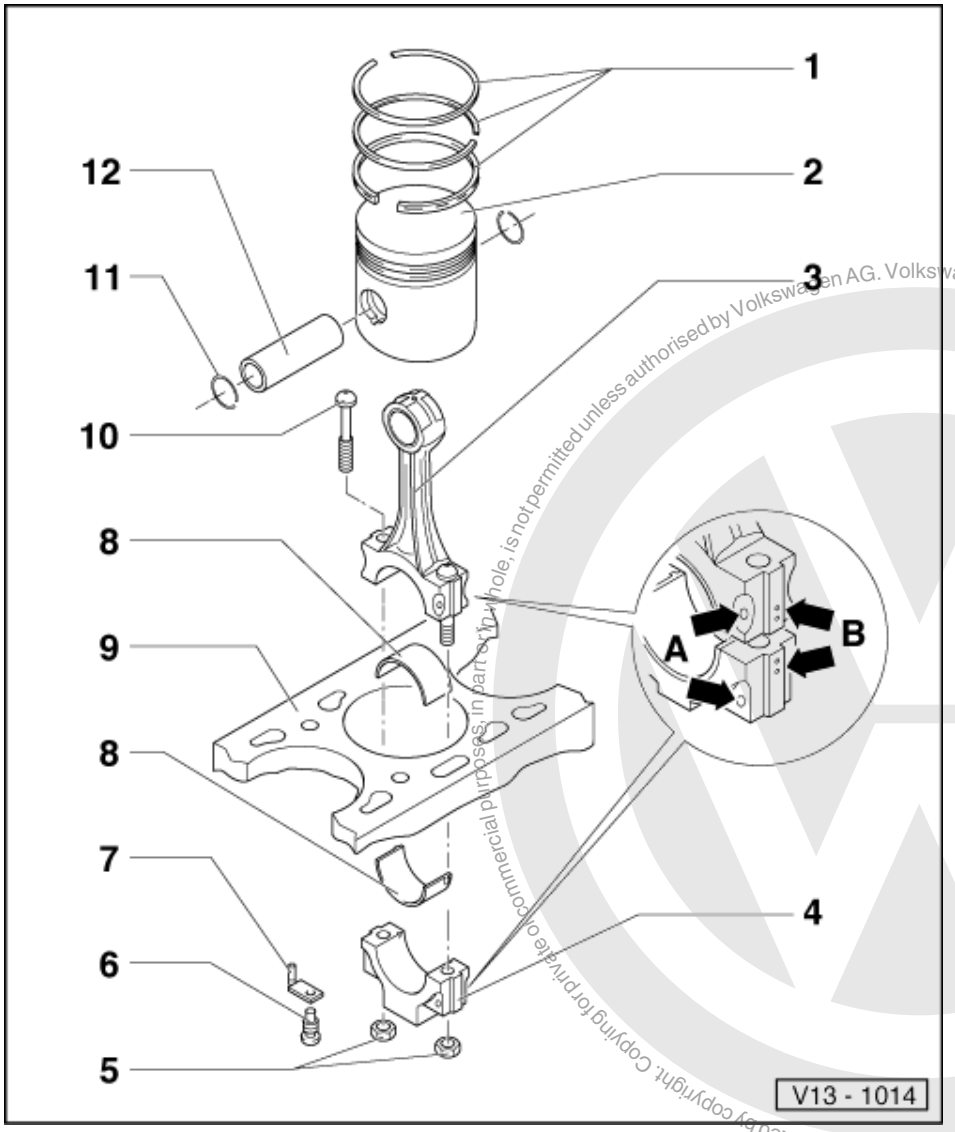


1 Piston ring
- Offset gaps by 120 °
- Remove and install with piston ring pliers
- "TOP" faces towards piston crown
- Checking ring gap=> Fig. 1
- Checking ring to groove clearance => Fig. 2
- 2 or 3 part oil scraper ring, mixed installations permissible

2 Piston
- Checking => Fig. 3
- Mark installation position and cylinder number
- Arrow on piston crown points to pulley end
- Install using piston ring clamp

Protected by copyright. Copying for private or commercial purposes, in part or in whole, is not permitted unless authorised by Volkswagen AG. Volkswagen AG does not guarantee or accept any liability with respect to the correctness of information in this document. Copyright by Volkswagen AG.
satelettronica

Protected by copyright. Copying for private or commercial purposes, in part or in whole, is not permitted unless authorised by Volkswagen AG. Volkswagen AG does not guarantee or accept any liability with respect to the correctness of information in this document. Copyright by Volkswagen AG.

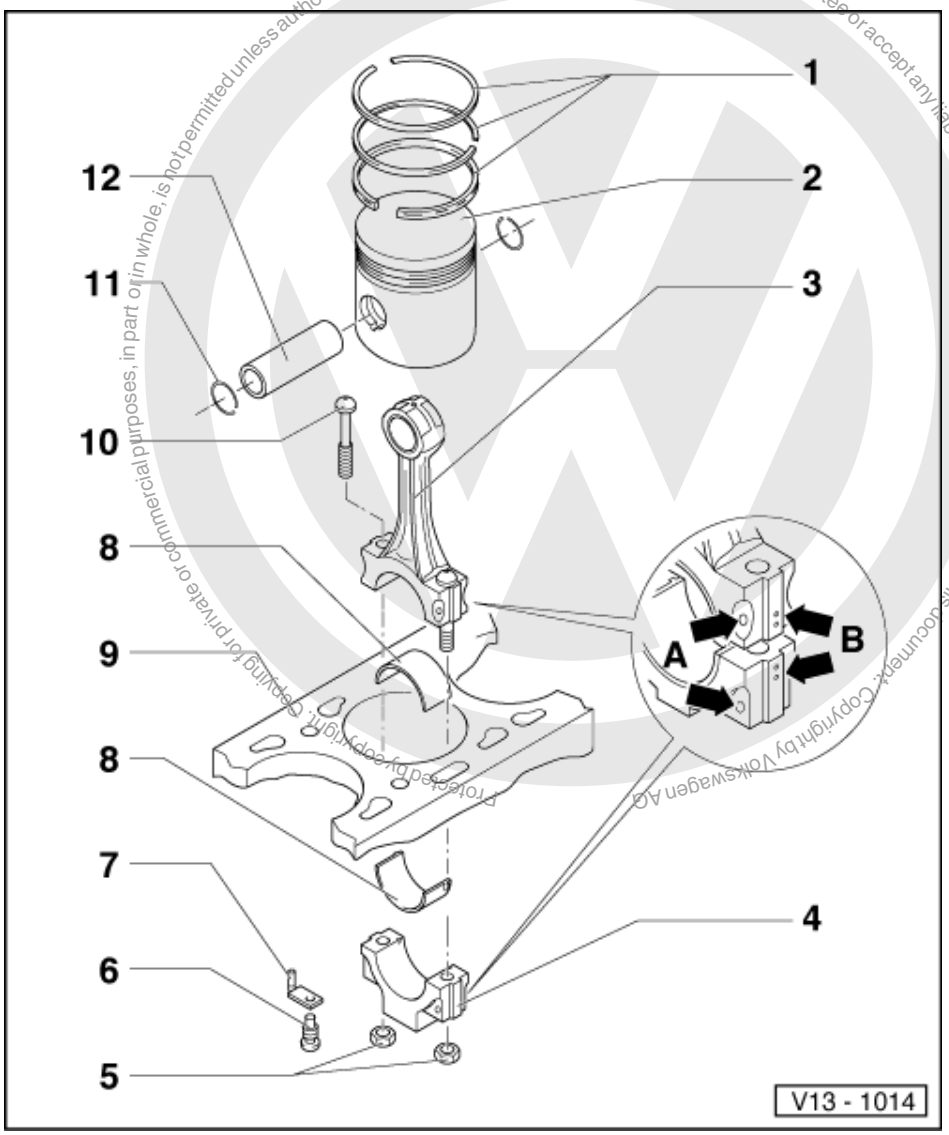


3 Conrod
- Only renew as a set
- Mark cylinder number -B-
- Installation position:
  Marking -A- faces towards pulley end

4 Conrod bearing cap
- Note installation position

5 30 Nm + 1/4 turn (90 °) further
- Alternative: Bolt
- Oil threads and contact surface
- To measure radial clearance tighten to 30 Nm but not further

6 Pressure relief valve, 27 Nm
- Opening pressure: 1.3...1.6 bar

7 Oil spray jet
- For piston cooling

satelettronica

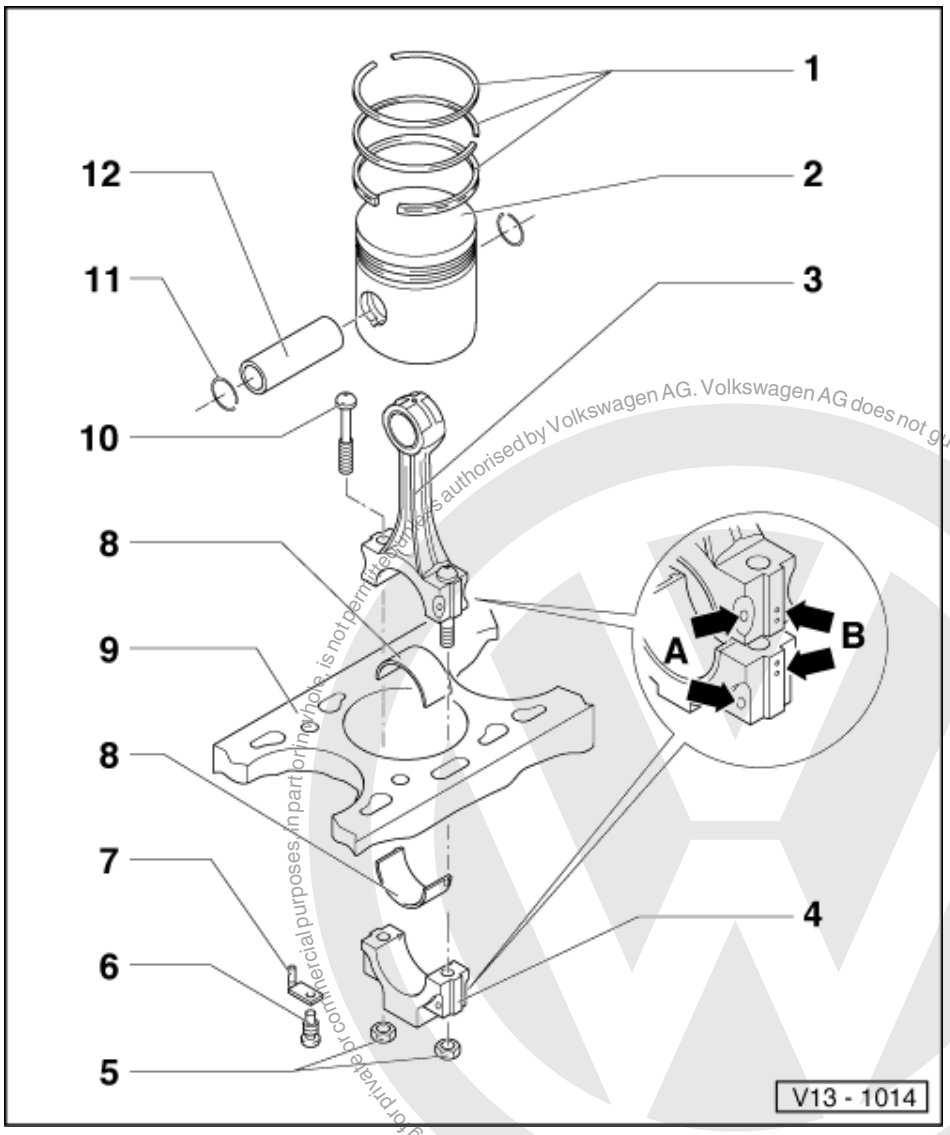


8 Bearing shell
- Note installation position
- Do not interchange used bearing shells
- Ensure retaining lugs fit tightly in recesses
- Axial clearance
  New: 0.05...0.31 mm
  Wear limit: 0.37 mm
- Check radial clearance with Plastigage:
  New: 0.01...0.06 mm
  Wear limit: 0.12 mm
  Do not rotate crankshaft when checking radial clearance

9 Cylinder block
- Checking cylinder bores
  =>Fig. 4
- Piston and cylinder dimensions
  =>Page 50

10 Conrod bolt

Protected by copyright. Copying for private or commercial purposes, in part or in whole is not permitted unless authorised by Volkswagen AG. Volkswagen AG does not guarantee or accept any liability with respect to the correctness of information in this document. Copyright by Volkswagen AG.
satelettronica

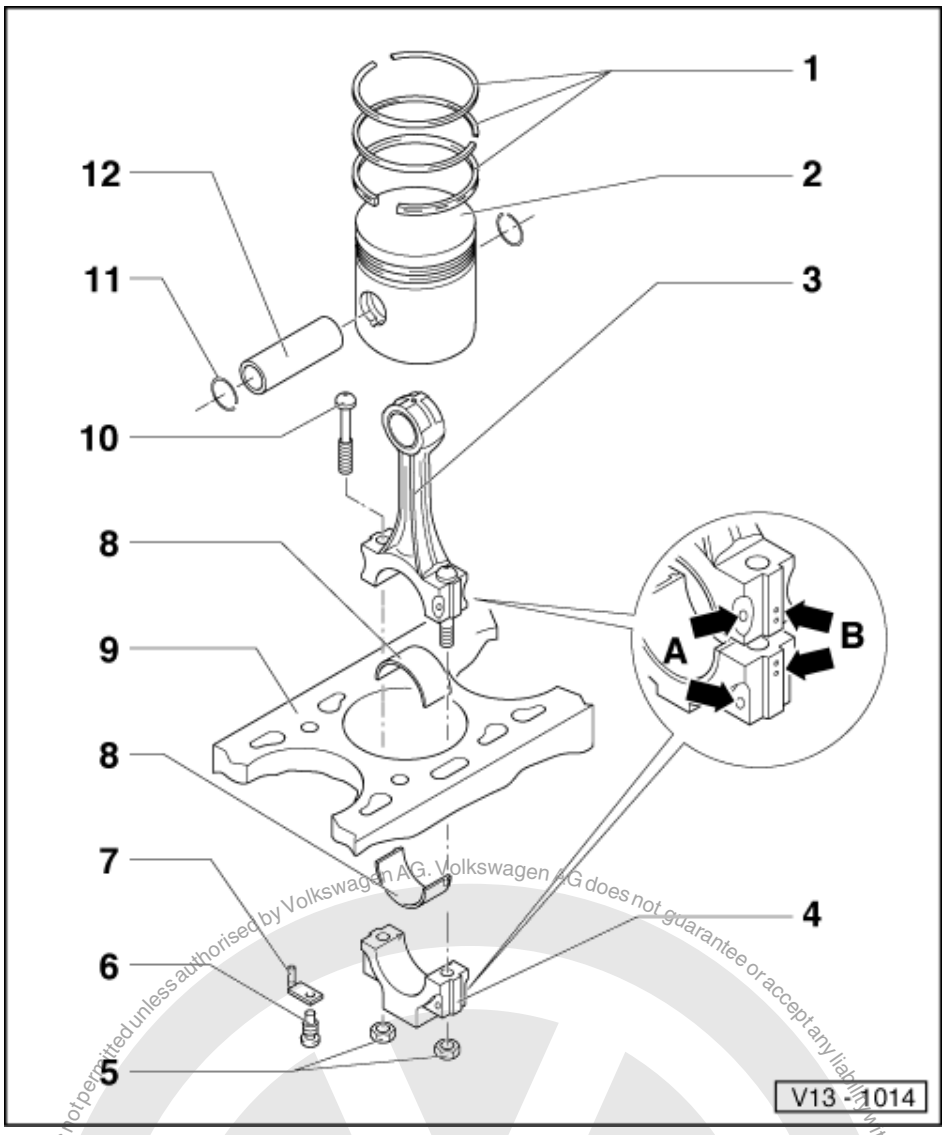


11 Circlip
12 Piston pin

- If difficult to remove, heat piston to 60 °C
- Remove and install with VW 222a

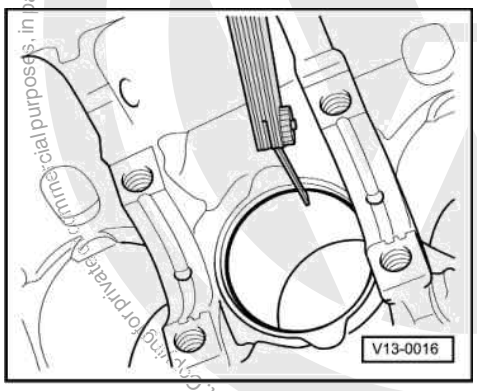


satelettronica
Protected by copyright. Copying for private or commercial purposes, in part or in whole, is not permitted unless authorised by Volkswagen AG. Volkswagen AG does not guarantee or accept any liability with respect to the correctness of information in this document. Copyright by Volkswagen AG.

-> Fig. 1 Checking piston ring gap

Special tools, workshop equipment, testers, measuring instruments and auxiliary items required

- Feeler gauges

- Push ring squarely from above down to approx. 15 mm from bottom end of cylinder.

| Piston ring | | Gap | |
|---|---|---|---|
| | | New | Wear limit |
| Compression rings | mm | 0.20...0.40 | 0.8 |
| Oil scraper ring | mm | 0.25...0.50 | 0.8 |

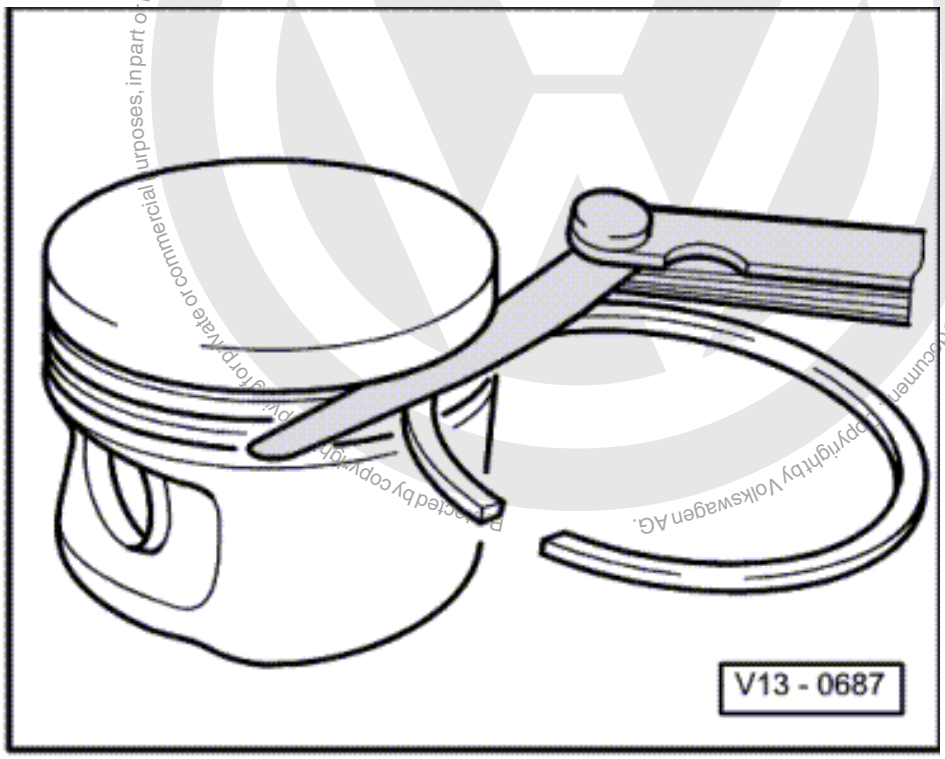


-> Fig. 2 Checking ring to groove clearance

Special tools, workshop equipment, testers, measuring instruments and auxiliary items required

- Feeler gauges

Clean groove before check.

| Piston ring | | Clearance | |
|---|---|---|---|
| | | New | Wear limit |
| Compression rings | mm | 0.06...0.09 | 0.20 |
| Oil scraper ring | mm | 0.03...0.06 | 0.15 |

Protected by copyright. Copying for private or commercial purposes, in part or in whole, is not permitted unless authorised by Volkswagen AG. Volkswagen AG does not guarantee or accept any liability with respect to the correctness of information in this document. Copyright by Volkswagen AG.
satelettronica

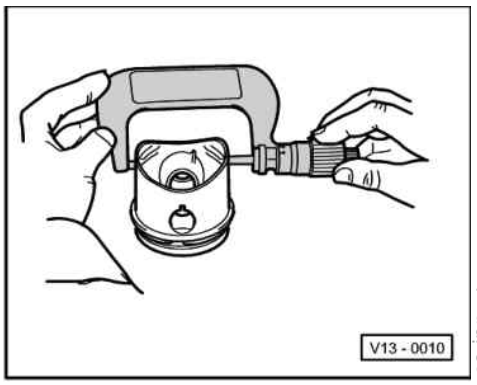


-> Fig. 3 Checking piston

Special tools, workshop equipment, testers, measuring instruments and auxiliary items required

- Micrometer 75...100 mm

Measure pistons approx. 10 mm from the lower edge of skirt, at 90 ° to the piston pin axis.

Deviation from nominal dimension
max. 0.04 mm

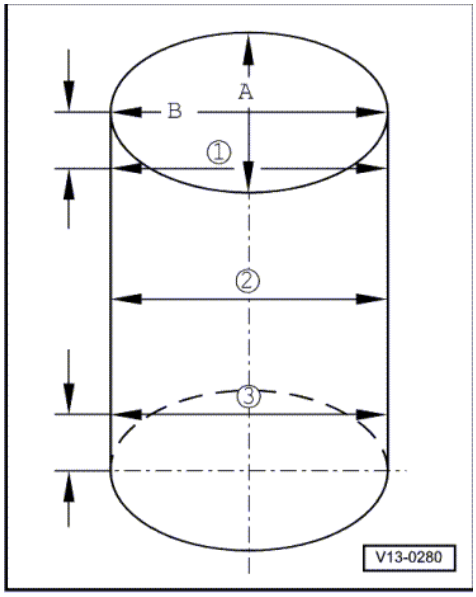


-> Fig. 4 Checking cylinder bores

Special tools, workshop equipment, testers, measuring instruments and auxiliary items required

- Internal dial gauge 50...100 mm
- Measure bores at 3 locations in both directions -A- across the engine and -B- in line with crankshaft.
- Deviation from nominal dimension
  max. 0.08 mm

*Note:*

*Measuring the cylinder bores must not be done when the cylinder block is mounted on a repair stand with adapter bracket VW 540, as incorrect measurements would then be possible.*

Protected by copyright. Copyright by Volkswagen AG. Volkswagen AG does not guarantee or accept any liability with respect to the correctness of information in this document. Copyright by Volkswagen AG. Protected by copyright. Copying for private or commercial purposes, in part or in whole, is not permitted unless authorised by Volkswagen AG.
satelettronica

## 4.2 - Piston and cylinder dimensions

| Honing dimension | | Piston-ø | Cylinder bore-ø |
|---|---|---|---|
| Basic dimen. | mm | 80.9651) | 81.01 |

1) Dimension without graphite coating (thickness 0.02 mm) the graphite coating wears away.

Protected by copyright. Copying for private or commercial purposes, in part or in whole, is not permitted unless authorised by Volkswagen AG. Volkswagen AG does not guarantee or accept any liability with respect to the correctness of information in this document. Copyright by Volkswagen AG.

satelettronica

# 15 - Cylinder head, Valve gear

## 1 - Removing and installing cylinder head

### 1.1 - Removing and installing cylinder head

Copyright by Volkswagen AG. Volkswagen AG does not guarantee or accept any liability with respect to the correctness of information in this document. Copyright by Volkswagen AG. Protected by copyright. Copying for private or commercial purposes, in whole or in part, is not permitted unless authorised by Volkswagen AG.

Checking compressions=> Page 63

*Notes:*

- When installing an exchange cylinder head with fitted camshaft, the contact surfaces between the bucket tappets and the cam must be oiled before installing the cylinder head cover.
- The plastic packing pieces for protecting the open valves must not be removed until immediately before fitting cylinder head.
- If the cylinder head is replaced, all the coolant in the system must also be renewed.
- Removing and installing intake manifold:

=> Repair group 24; Servicing injection system; Removing and installing parts of injection system Servicing injection system Removing and installing parts of injection system

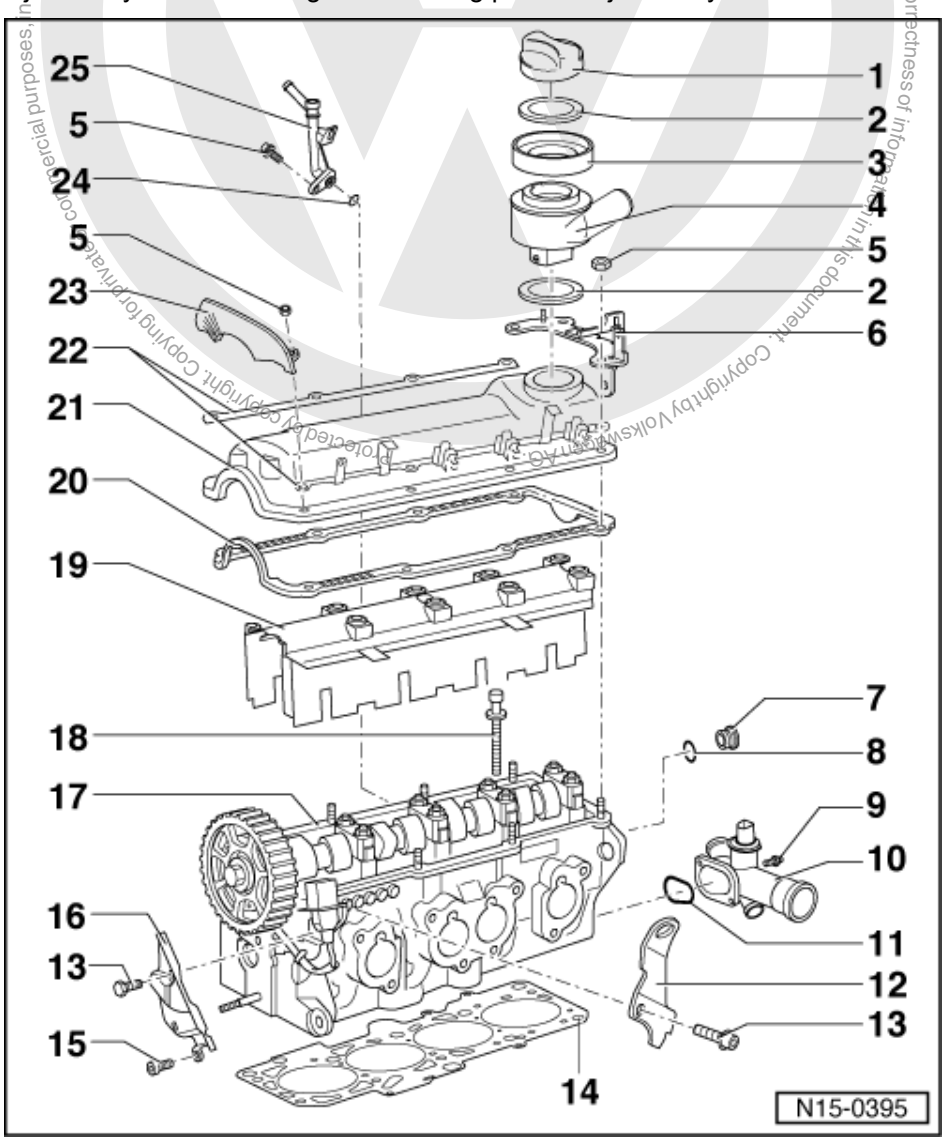


satelettronica

1 Cap
2 Gasket
- Renew if damaged

3 Gasket
- Renew if damaged

4 Breather housing
- To remove turn breather housing clockwise

5 10 Nm
6 Bracket
7 Sealing plug - 15 Nm
- Renew

8 Oil seal
- Renew

9 10 Nm

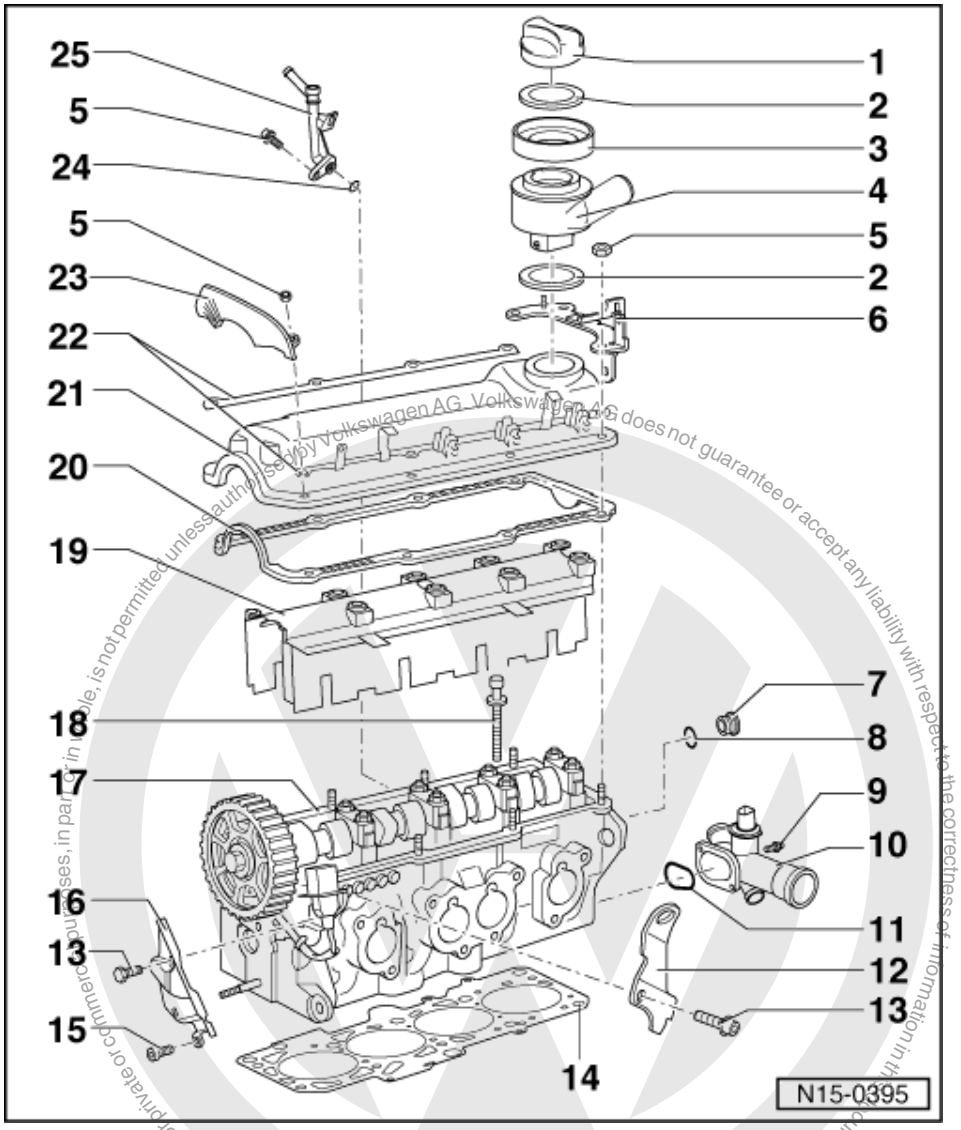


10 Connection
11 O-ring
- Renew

12 Lifting eye
13 20 Nm
14 Cylinder head gasket

Protected by copyright. Copying for private or commercial purposes, in part or in whole, is not permitted unless authorised by Volkswagen AG. Volkswagen AG does not guarantee or accept any liability with respect to the correctness of information in this document. Copyright by Volkswagen AG.
satelettronica

- Renew
- After replacing renew the complete coolant

15 15 Nm

16 Rear toothed belt guard

17 Cylinder head

- Check for distortion => Fig. 1
- Reworking sealing surface
  => Page 68 , Fig. 1
- Removing and installing
  => Page 59
- After replacing renew the complete coolant

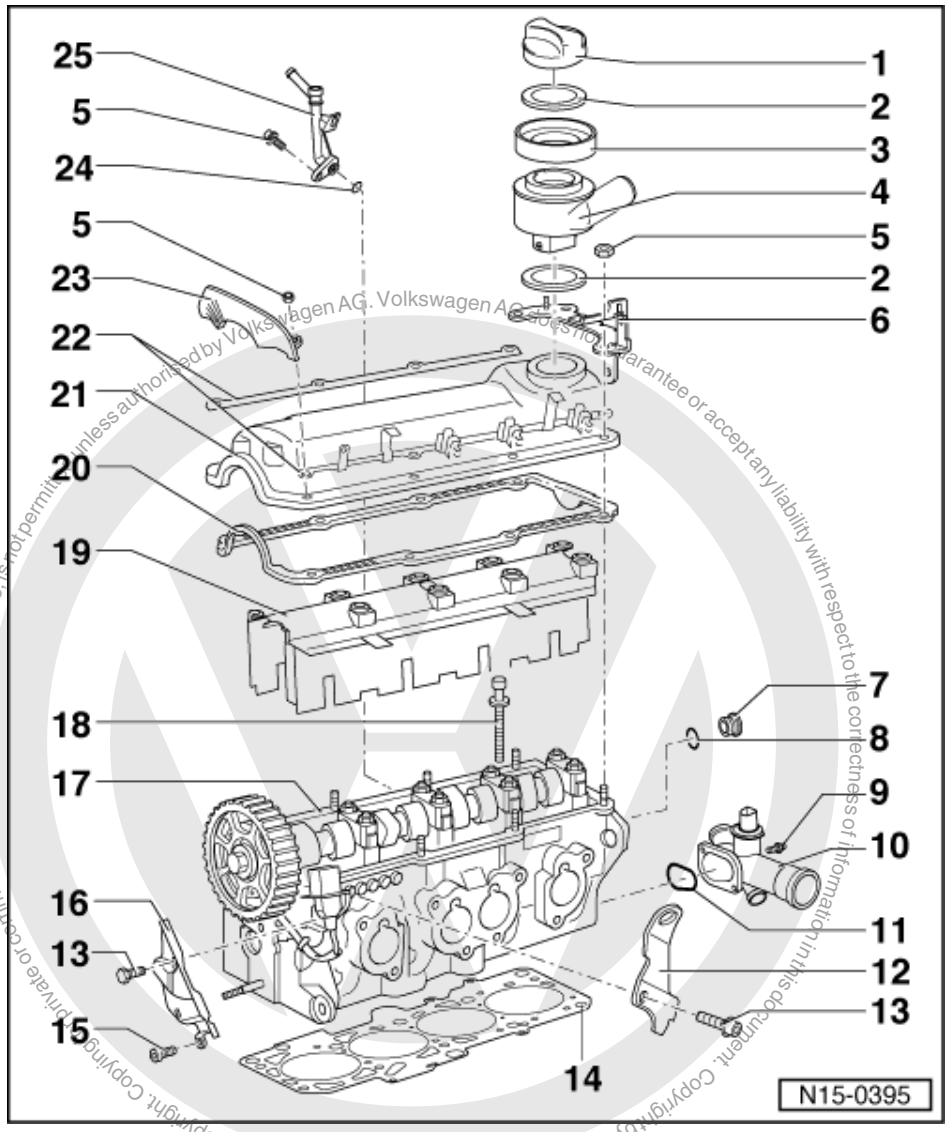


18 Cylinder head bolt

- Renew
- Removing and installing Polydrive cylinder head bolt with 3452 or T10070
- Observe sequence when loosening and tightening => Page 59 , Removing and installing cylinder head

19 Oil deflector

20 Cylinder head cover gasket

- Renew if damaged
- Before fitting gasket, coat transition between bearing cap/cylinder head with "D 454 300 A2"

21 Cylinder head cover

22 Reinforcing strip

23 Toothed belt guard

satelettronica

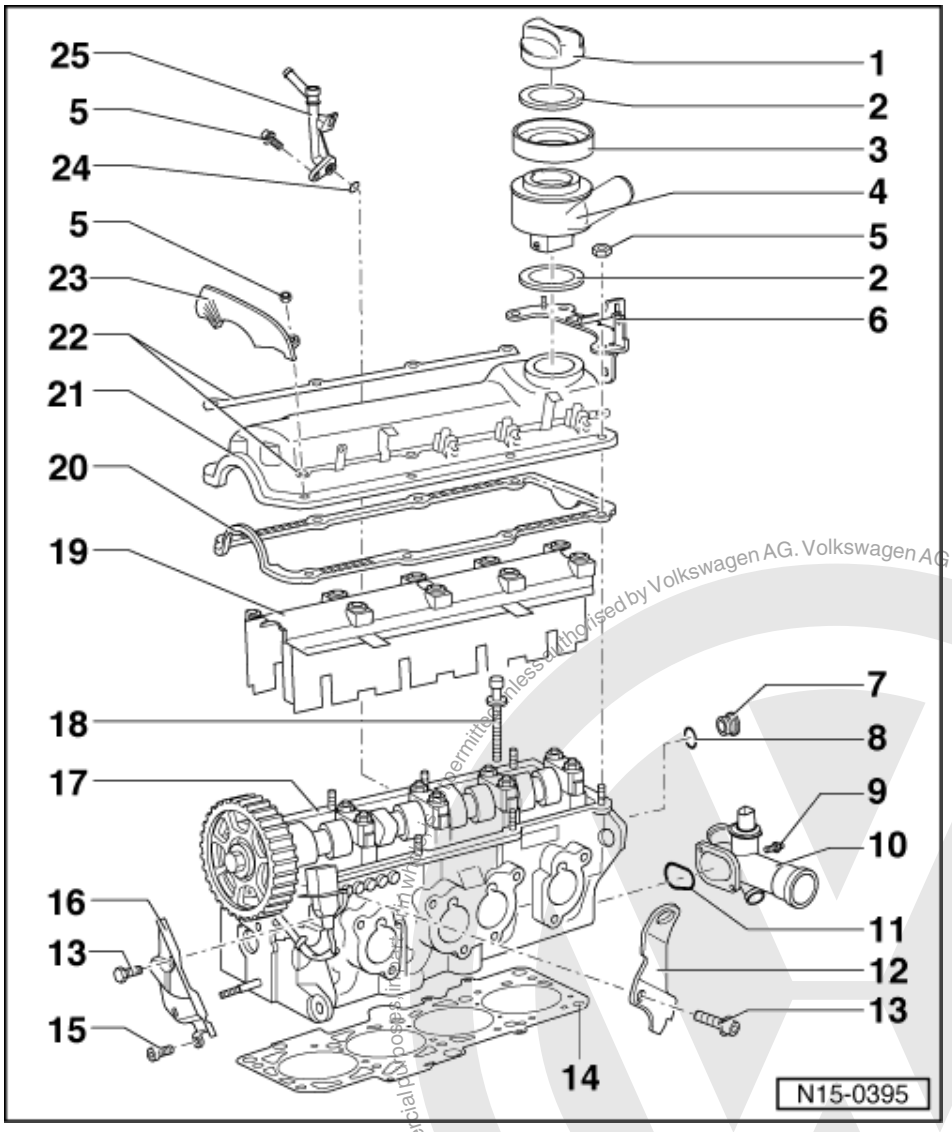


24 O-ring
- Renew

25 Breather connection
- To expansion chamber
- Only for engine code APF

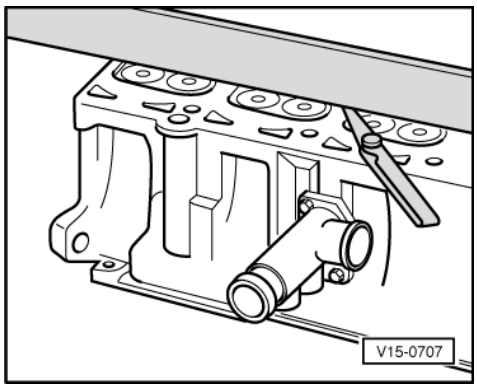


Protected by copyright. Copying for private or commercial purposes, in whole or in part, is not permitted unless authorised by Volkswagen AG. Volkswagen AG does not guarantee or accept any liability with respect to the correctness of information in this document. Copyright by Volkswagen AG.
satelettronica

-> Fig. 1 Checking cylinder head for distortion

Max. permissible distortion: 0.1 mm

## 1.2 - Removing, installing and tensioning toothed belt

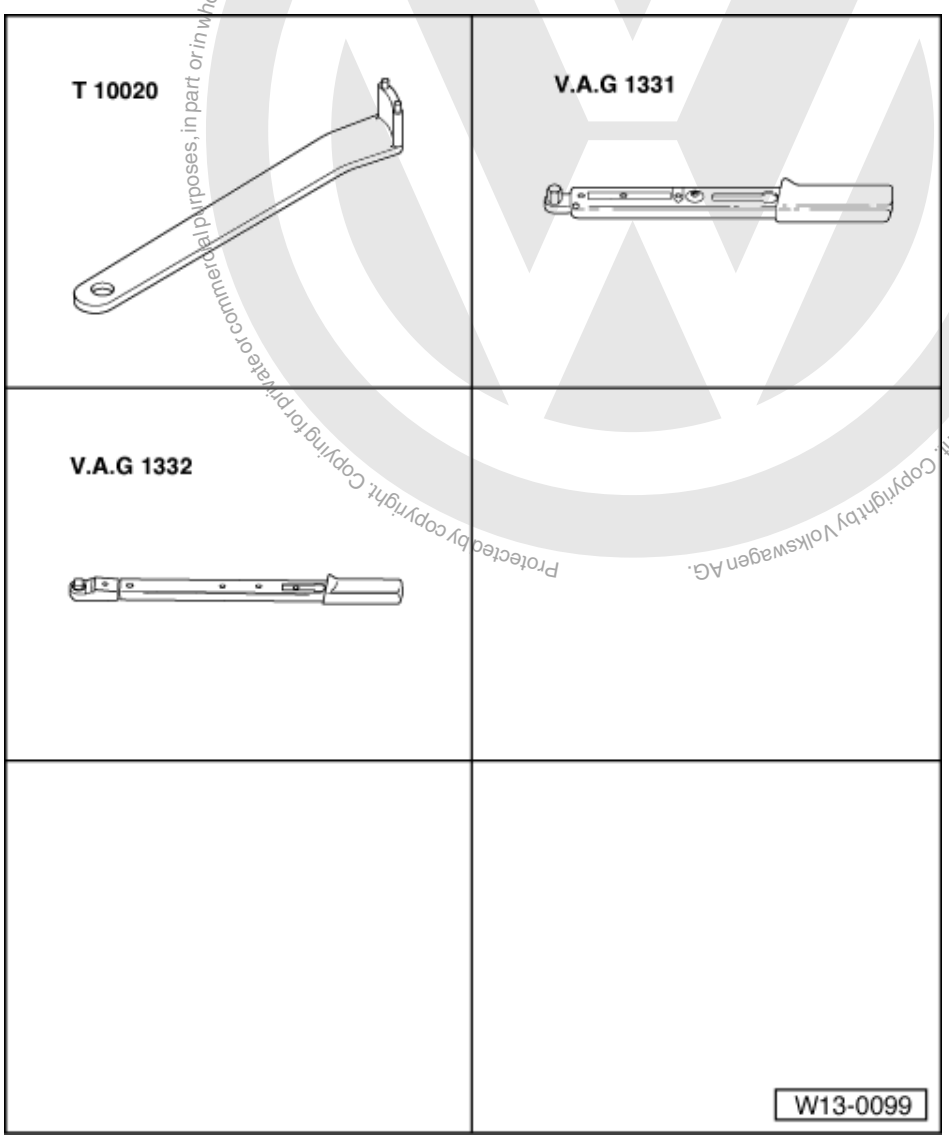


(Adjusting valve timing)

**Special tools, workshop equipment, test and measuring appliances and auxiliary items required**

- T 10020 Two-hole pin wrench
- V.A.G 1331 Torque wrench (5...50 Nm)
- V.A.G 1332 (40...200 Nm) Torque wrench

Volkswagen AG. Volkswagen AG does not guarantee or accept any liability with respect to the correctness of information in this document. Copyright by Volkswagen AG. Protected by copyright. Copying for private or commercial purposes, in part or in whole, is not permitted unless authorised by
satelettronica

Protected by copyright. Copying for private or commercial purposes, in part or in whole, is not permitted unless authorised by Volkswagen AG. Volkswagen AG does not guarantee or accept any liability with respect to the correctness of information in this document. Copyright by Volkswagen AG.

satelettronica

### Removing

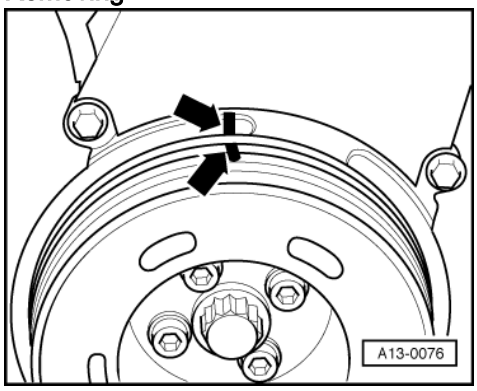


- Remove engine cover.
- Remove toothed belt guard - upper part.
- Remove ribbed belt => Page 26 .
- Remove tensioning element for ribbed belt.
- -> Turn crankshaft to TDC No. 1 cylinder.
- Mark D.O.R. of toothed belt.

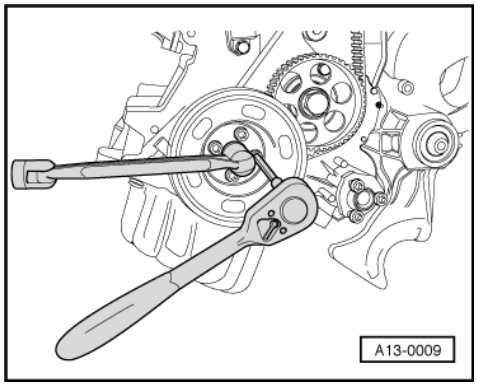


- -> Remove vibration damper/belt pulley.
- Remove toothed belt guard centre and lower parts.
- Release tensioner and take off toothed belt.
- Turn crankshaft back slightly.

### Installing

*Note:*

*When the camshaft is turned, the crankshaft must not be at TDC. Danger of damage to valves or piston crowns.*

**A - Toothed belt completely removed**

If toothed belt has only been removed from camshaft => Page 57

**Conditions**

- The pistons must not be positioned at TDC.

### Work sequence

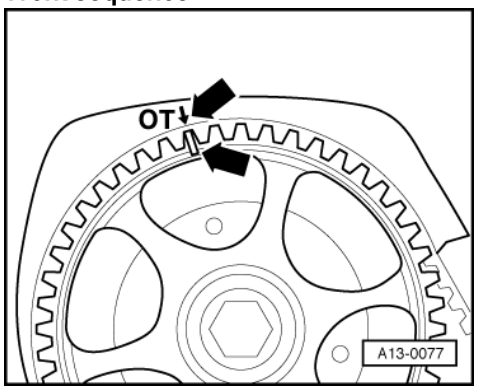

- -> Bring mark on camshaft into line with the mark on toothed belt guard.
- Place toothed belt on crankshaft pulley and coolant pump (observe DOR).
- Install toothed belt guard centre and lower parts.
- Install vibration damper/belt pulley
  Tightening torque: 25 Nm

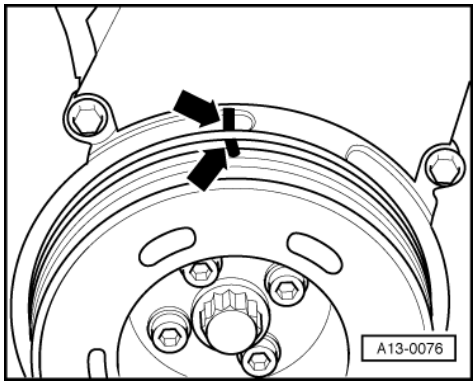


- -> Turn crankshaft to TDC No. 1 cylinder.
- Place toothed belt on tensioning roller and camshaft sprocket and tension => Page 57 .

B - Toothed belt only taken off camshaft sprocket

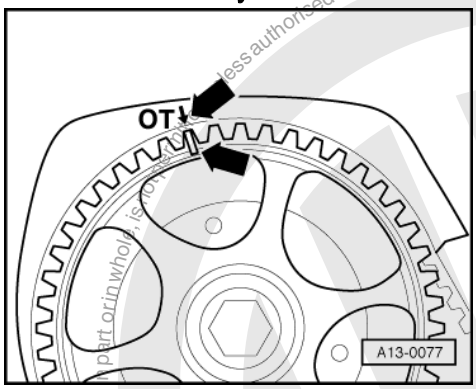


- -> Bring mark on camshaft into line with the mark on toothed belt guard.
- Turn crankshaft to TDC No. 1 cylinder.
- Place toothed belt on the camshaft sprocket and tension => Page 57 .

Tensioning toothed belt

Conditions

- The engine must not be more than warm to the touch.
- Engine is at TDC No. 1 cylinder.
- Before tensioning toothed belt turn tensioning roller on eccentric with a pin wrench T10020 five times in both directions fully onto the stops.

Work sequence

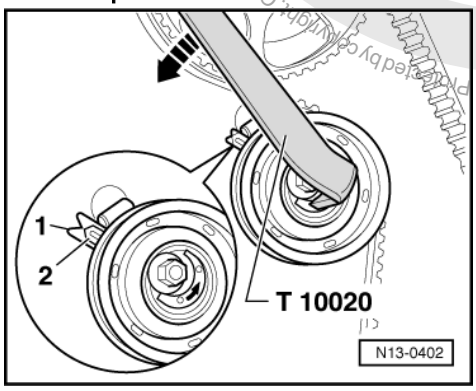


satelettronica

- -> Tension toothed belt. Do this by turning eccentric to left (direction of arrow) with 2-hole pin wrench T 10020 onto stop.
- Then release the toothed belt until the notch -1- and indicator -2- align (use mirror).
- Tighten securing nut to 20 Nm.
- Turn crankshaft two turns in engine direction of rotation until the engine is again at TDC No. 1 cylinder. When doing this it is important that the last 45° (1/8 turn) is performed without stopping.
- Check toothed belt tension again
  Specification: indicator and notch align

### Continuation, installing toothed belt

- Install upper toothed belt guard.
- Install ribbed belt tensioner.
  Tightening torque: 25 Nm
- Install ribbed belt => Page 26 .
- Install noise insulation tray.
- Install engine cover

## 1.3 - Checking semi-automatic toothed belt tensioning roller

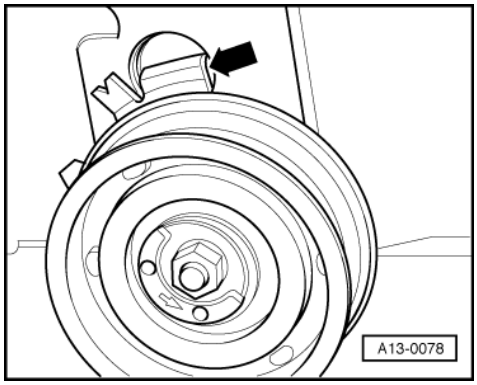


### Installation position

- -> The angled retainer -arrow- must located in cut-out on cylinder head.

### Conditions

- The engine must not be more than warm to the touch.

### Test sequence

- Set the engine to TDC No. 1 cylinder.

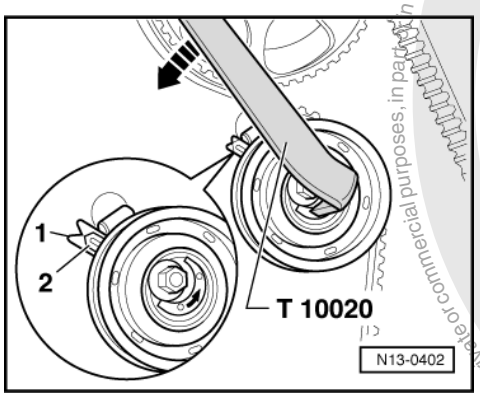


- -> Press hard with thumb on toothed belt. The indicator -2- must move.
- Release toothed belt and turn crankshaft two turns in engine direction of rotation until the engine is again at TDC No.1 cylinder. When doing this it is important that the last 45° (1/8 turn) is performed without stopping.

Protected by copyright. Copying for private or commercial purposes, in part or in whole, is not permitted unless authorised by Volkswagen AG. Volkswagen AG does not guarantee or accept any liability with respect to the correctness of information in this document. Copyright by Volkswagen AG.
satelettronica

- The tensioning roller must return to its original position. (Notch -1- and indicator -2- are again aligned).

*Note:*

*For checking use a mirror.*

## 1.4 - Removing and installing cylinder head

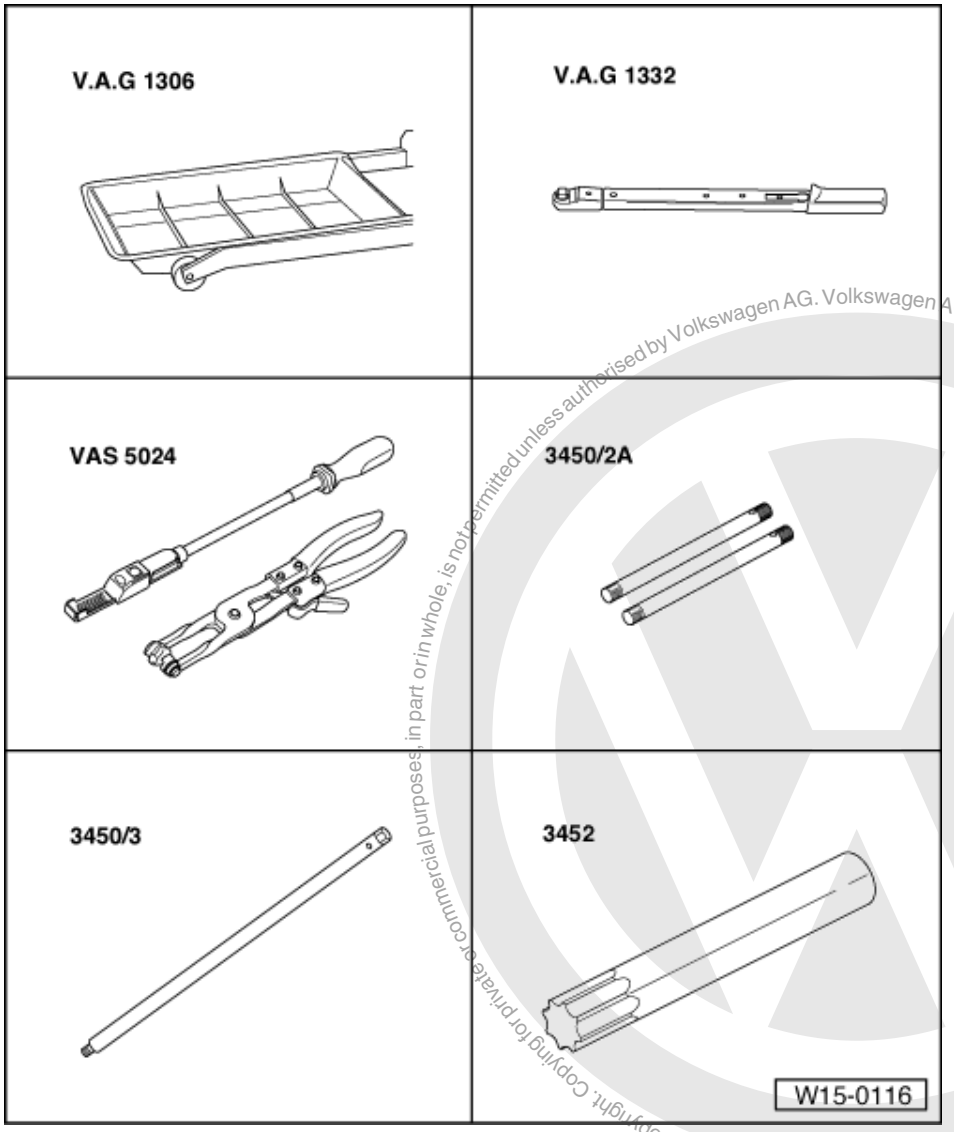


satelettronica
Copyright by Volkswagen AG. Volkswagen AG does not guarantee or accept any liability with respect to the correctness of information in this document. Copying for private or commercial purposes, in part or in whole, is not permitted unless authorised by Volkswagen AG.

**Special tools, workshop equipment, test and measuring appliances and auxiliary items required**

- V.A.G 1306 Drip tray
- V.A.G 1332 (40...200 Nm) Torque wrench
- VAS 5024 Assembly tool for spring-type clip
- 3450/2A Guide pins
- 3450/3 Removal tool

**Engines with Polydrive cylinder head bolts:**

- 3452 Tool or T10070 socket insert

### Prerequisites

- The engine must be no more than warm to touch.

### Work sequence

- First check whether a coded radio is fitted. If this is the case obtain the anti-theft coding.
- With the ignition switched off disconnect battery earth strap.
- Drain coolant => Page 114 .

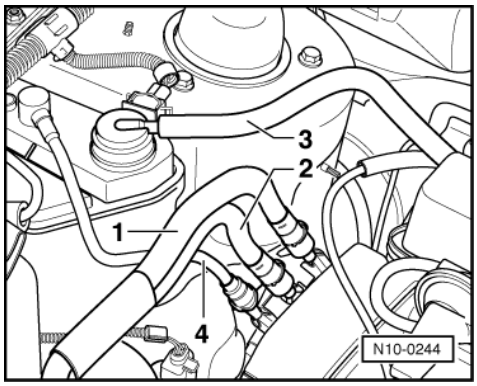


Warning!
Fuel system is under pressure! Before opening the system place a cloth around the connection. Then release pressure by carefully loosening the connection.

- -> Pull off supply pipe/hose -1- (with white marking) and return pipe/hose -2- (with blue marking) and collect fuel that leaks out with a cloth.

***Note:***

*Press buttons on hose couplings to do this.*

- Seal the pipes so that the fuel system is not contaminated by dirt etc.
- Observe rules for cleanliness => Page 131 .
- Pull hose -3- off activated charcoal filter solenoid valve 1.
- Remove intake manifold upper part:

=> Repair group 24; Servicing injection system; Removing and installing parts of injection system Servicing injection system Removing and installing parts of injection system

***Note:***

*Seal the intake ports in the intake manifold lower part with a clean cloth.*

- If necessary, remove exhaust gas recirculation connection pipe.
- If necessary, remove intake and pressure pipes for the secondary air pump.
- If necessary, unbolt and remove secondary air pump motor and bracket.
- Unbolt coolant connecting piece.
- Remove front exhaust pipe with catalyst from exhaust manifold.
- Remove toothed belt guard - upper part.

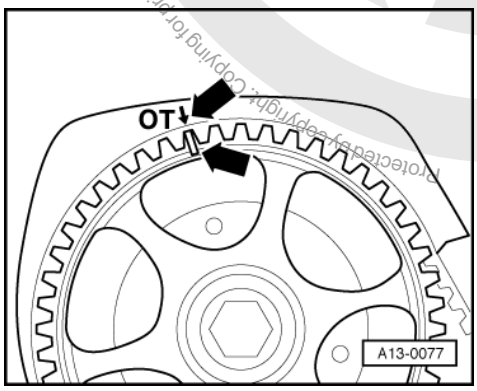


satelettronica

- -> Set camshaft sprocket to TDC No. 1 cylinder by turning the crankshaft. Mark on camshaft sprocket must align with arrow on toothed belt guard.
- Release tensioning roller and take toothed belt off camshaft sprocket.
- Turn crankshaft back slightly.
- Remove cylinder head cover.

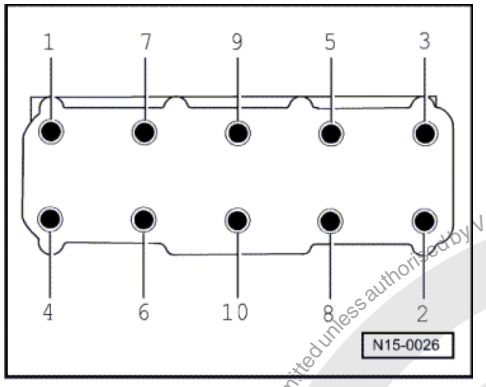


- -> Loosen cylinder head bolts in the sequence given and then remove completely.

*Note:*

*Use tool 3452 or socket insert T10070 for Polydrive cylinder head bolts.*

- Carefully lift cylinder head off.

Installing

*Notes:*

- There must be no oil or coolant in the cylinder head bolt pockets in the cylinder block.
- Only remove the new cylinder head gasket from its packing immediately before installing.
- Handle the new gasket with extreme care. Damaging will lead to leaks.

- Place a clean cloth in cylinders so that no dirt or emery cloth particles can get in between cylinder wall and piston.
- Also prevent dirt and emery cloth particles from getting into the coolant.
- Carefully clean cylinder head and cylinder block sealing surfaces. Thereby ensuring that no scoring or scratches are formed (when using abrasive paper the grade must not be less than 100).
- Carefully remove metal particles, emery remains and cloths.
- If the crankshaft has been turned in the mean time, set No. 1 cylinder piston to top dead centre and then turn crankshaft back slightly.

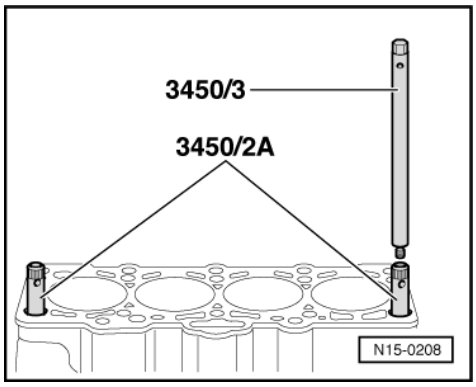


- -> To centralize, screw guide pins from 3450/2A into front outer holes for cylinder head bolts.

Protected by copyright. Copying for private or commercial purposes, in part or in whole, is not permitted unless authorised by Volkswagen AG. Volkswagen AG does not guarantee or accept any liability with respect to the correctness of information in this document. Copyright by Volkswagen AG.
satelettronica

***Note:***

*The tolerance at the upper end of the centralizing holes has been reduced. Therefore, before fitting the cylinder head check whether the guide pins can be removed upwards. If necessary, grind down the knurling on the guide pins.*

- Fit new cylinder head gasket. Lettering (Part No.) must be readable.
- Fit cylinder head, screw in 8 remaining cylinder head bolts and tighten by hand.
- Unscrew guide pins through bolt hole using removal tool 3450/3. To do this, turn removal tool anti-clockwise until the pins are free.
- Fit remaining cylinder head bolts and tighten hand-tight.

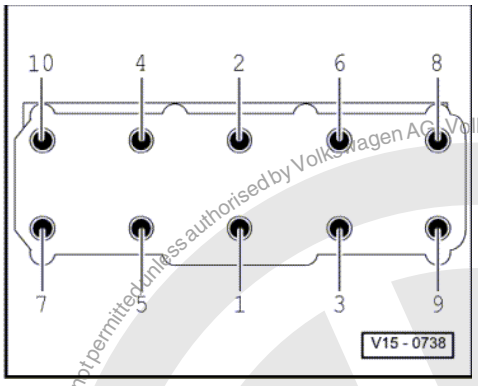


- -> Tighten cylinder head in tightening sequence as follows:
- Pretighten all bolts to 40 Nm.
- Then tighten all bolts a 1/4 turn (90 °) further using a rigid wrench.
- Then tighten all bolts again a 1/4 turn (90 °) further.

***Note:***

*When the camshaft is turned, the crankshaft must not be at TDC. Danger of damage to valves or piston crowns.*

The rest of the assembly is basically a reverse of the dismantling sequence.

Installing toothed belt and adjusting valve timing => Page 55 .

Filling with new coolant => Page 114 .

Protected by copyright. Copying for private or commercial purposes, in part or in whole, is not permitted unless authorised by Volkswagen AG. Volkswagen AG does not guarantee or accept any liability with respect to the correctness of information in this document. Copyright by Volkswagen AG.
satelettronica

## 1.5 - Checking compression pressures

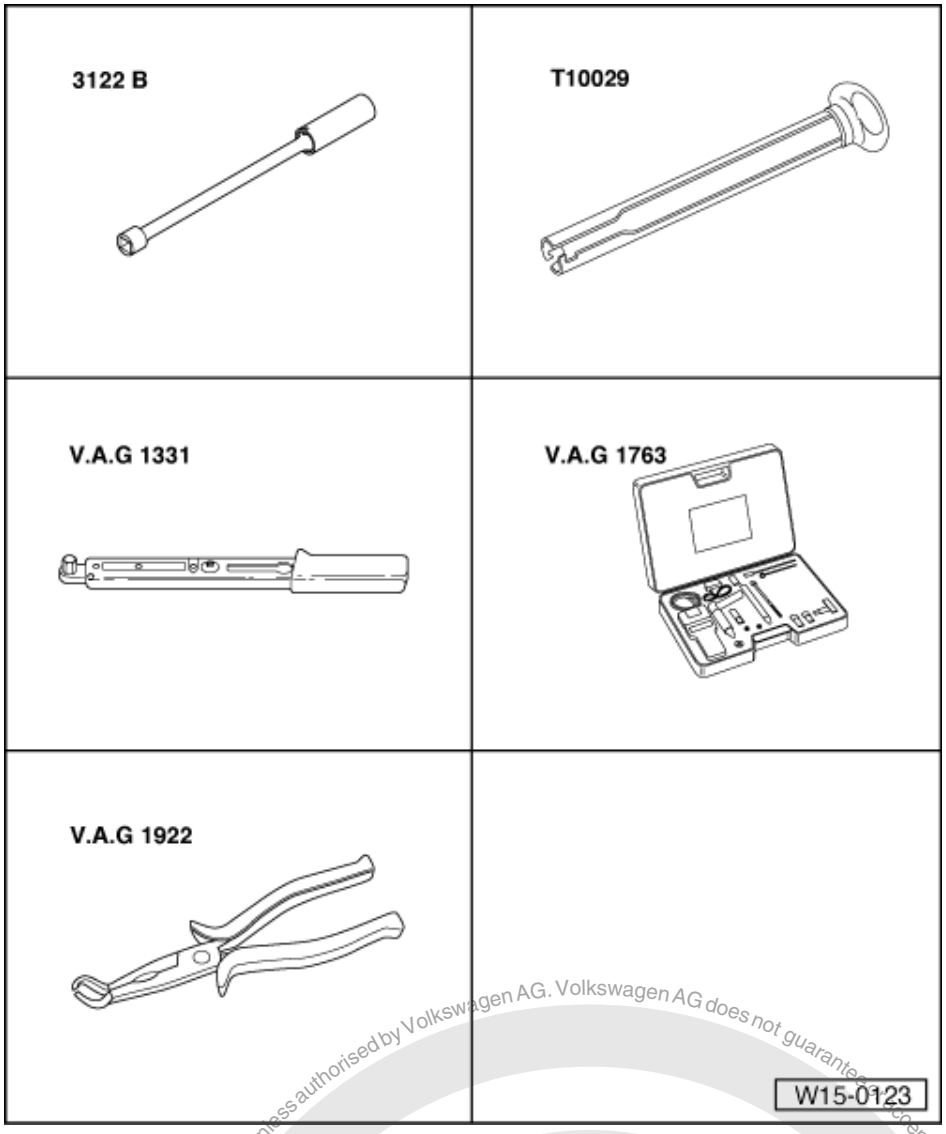


**Special tools, workshop equipment, test and measuring appliances and auxiliary items required**

- 3122 B Spark plug spanner
- T10029 Assembly tool
- V.A.G 1331 Torque wrench (5...50 Nm)
- V.A.G 1763 Compression tester
- V.A.G 1922 Spark plug connector pliers

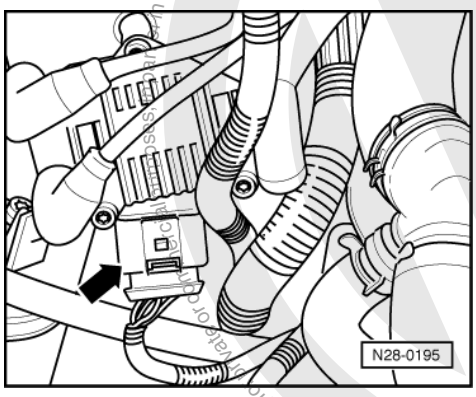


satelettronica
Protected by copyright. Copying for private or commercial purposes, in whole or in part, is not permitted unless authorised by Volkswagen AG. Volkswagen AG does not guarantee or accept any liability with respect to the correctness of information in this document. Copyright by Volkswagen AG.

Check conditions

- Engine oil temperature must be at least 30 °C.
- Voltage supply OK.

Work sequence

- -> Pull 4 pin connector off ignition transformer (N152) -arrow-.

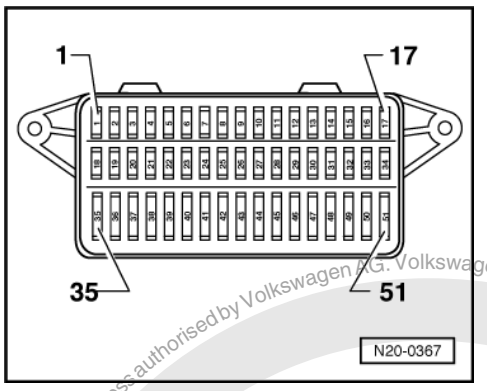


- -> Remove fuse 40 for fuel pump.
- Pull connectors off outer injectors.
- Pull off spark plug connectors on cylinders 1 and 4 using special tool T10029, and on cylinders 2 and 3 with spark plug connector pliers V.A.G 1922.
- Remove spark plugs.
- Have a second mechanic fully depress accelerator pedal and operate the starter.
- Check compressions with compression tester V.A.G 1763 and adapter V.A.G 1763/6.

*Note:*

*Using the compression tester => Operating instructions.*

- Operate starter until tester shows no further pressure increase.

Compression pressure:

New: 10...13 bar
Wear limit: 7.5 bar

Permissible difference between all cylinders: 3 bar

- Finally, erase engine control unit's fault memory because pulling off injector connectors will have caused a fault to be recorded:

=> Repair group 01; Fault memory; Interrogating and erasing fault memory of engine control unit Fault memory Interrogating and erasing fault memory of engine control unit

# 2 - Servicing valve gear

## 2.1 - Servicing valve gear

*Notes:*

- Cylinder heads which have cracks between the valve seats or between valve seat inserts and the spark plug thread can be used further without reducing service life, provided the cracks do not exceed a maximum of 0.3 mm in width, or when no more than the first four spark plug threads are cracked.

Protected by copyright. Copyright Volkswagen AG. Private or commercial purposes, in part or in whole, is not permitted unless authorised by Volkswagen AG. Volkswagen AG does not guarantee or accept any liability with respect to the correctness of information in this document.
satelettronica

- After installing new bucket tappets the engine must not be started for approx. 30 minutes (otherwise valves will strike pistons), then turn crankshaft two rotations.

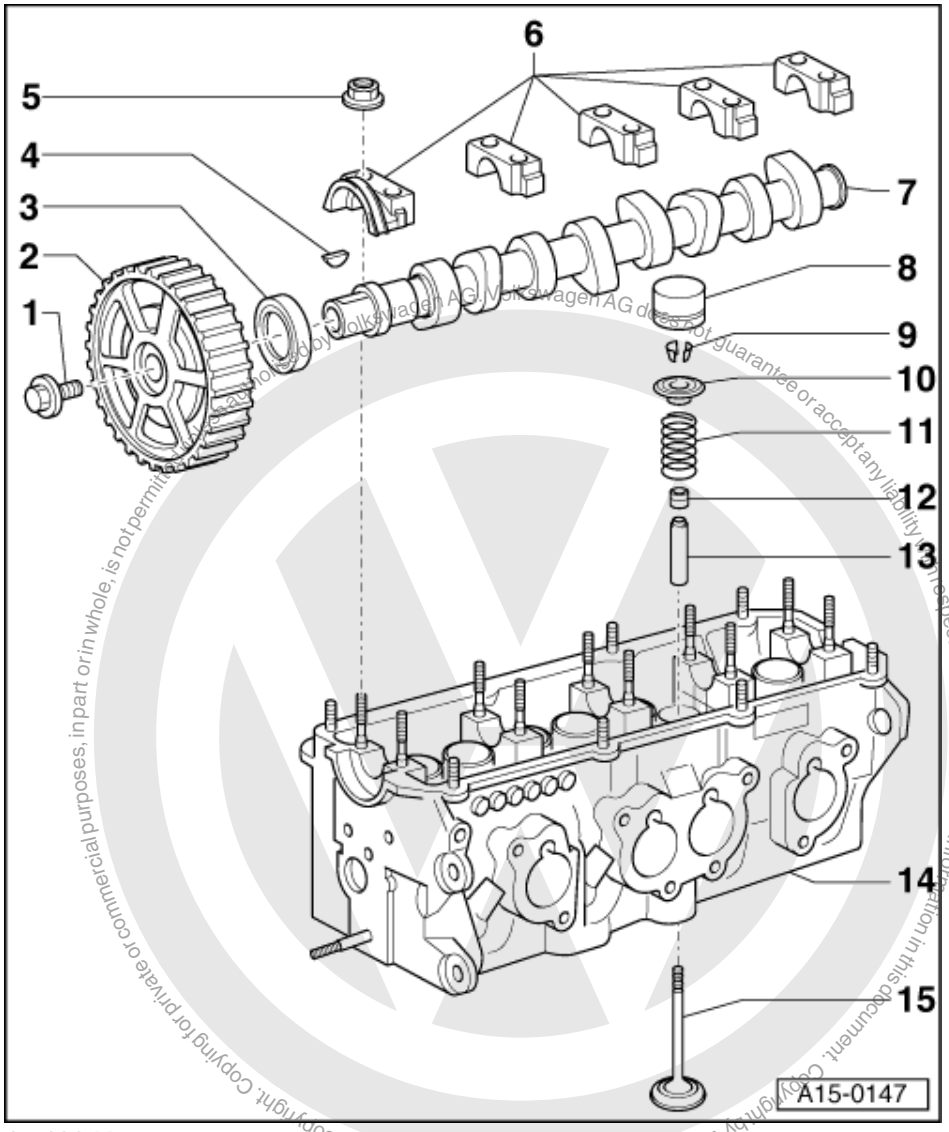


1 100 Nm
- Use counter-hold tool 3415 to loosen and tighten

2 Camshaft sprocket
- With rotor for Hall sender

3 Oil seal
- Renew=> Page 72

4 Woodruff key
- Ensure tight fit

5 20 Nm

6 Bearing cap
- Installation position => Fig. 3
- Installation sequence
  => Page 75 , removing and installing camshaft
- Coat contact surfaces of bearing cap 1 lightly with sealant AMV 174 004 01

satelettronica

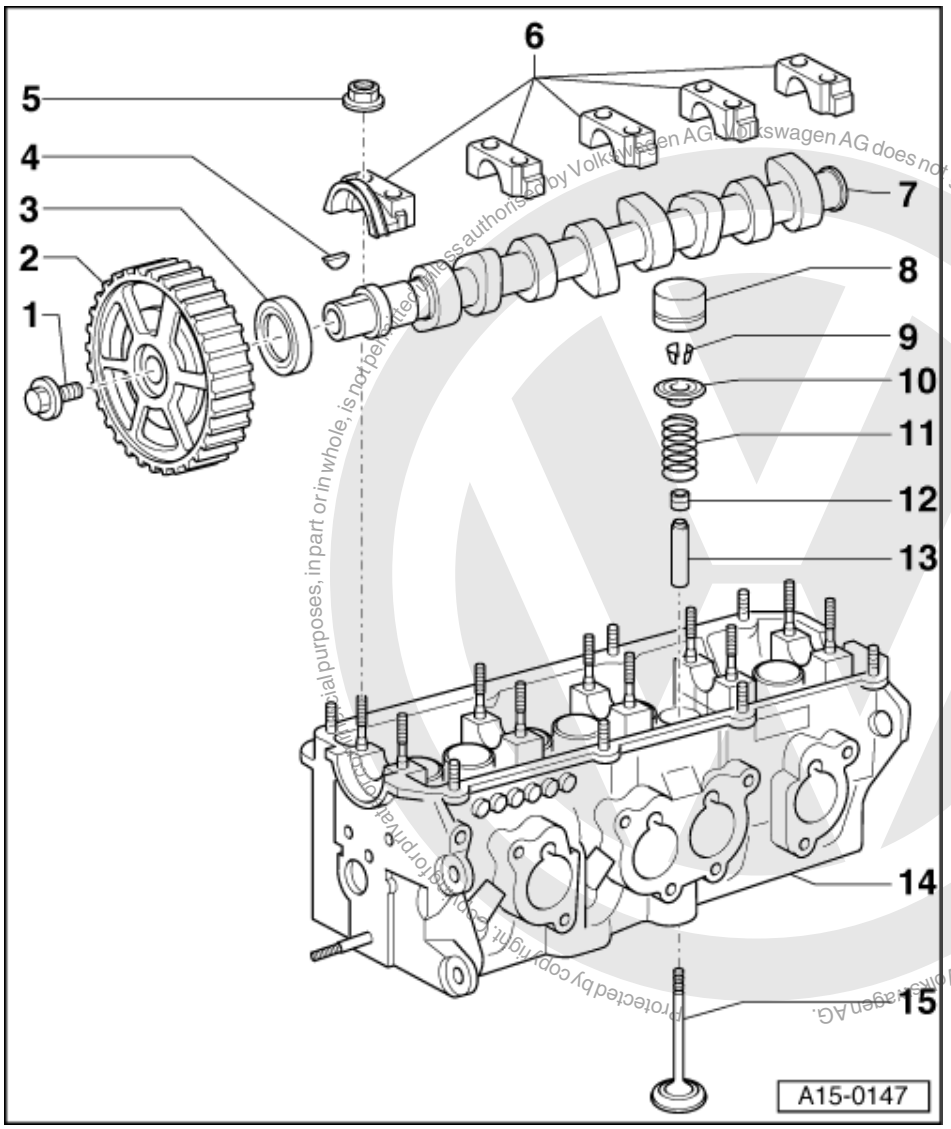


Volkswagen AG does not guarantee or accept any liability with respect to the correctness of information in this document. Copyright by Volkswagen AG.
Protected by copyright. Copying for private or commercial purposes, in part or in whole, is not permitted unless authorised by Volkswagen AG.
satelettronica

7 Camshaft
- Checking axial clearance => Fig. 2
- Removing and installing
  => Page 75
- Checking radial clearance with plastigage
  Wear limit: 0.1 mm
- Run-out: max. 0.01 mm

8 Bucket tappet
- Do not interchange
- With hydraulic valve clearance compensation
- Checking => Page 78
- Store with cam lobe contact surface downwards
- Before installing check camshaft axial clearance => Fig. 2
- Oil contact surface

9 Cotters

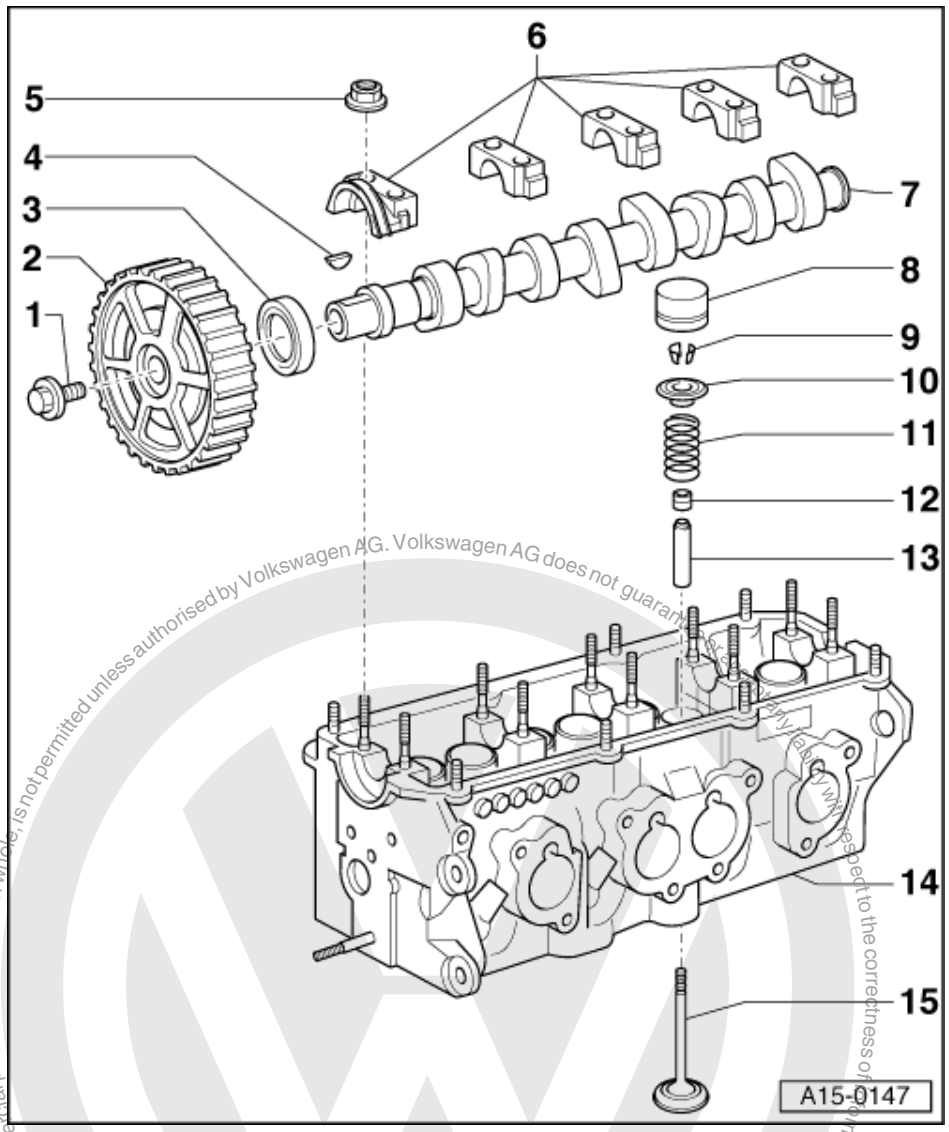


10 Upper valve spring plate

11 Valve spring

- Removing and installing:
  Cylinder head
  removed: with 2037
  installed: => Page 81 , renewing valve stem seals

12 Valve stem seal

- Renewing=> Page 81

13 Valve guide

- Checking => Page 79
- Renewing => Page 80
- Service version with collar

14 Cylinder head

- Reworking valve seats
  => Page 70

15 Valves

- Do not rework only grinding-in is permitted
- Valve dimensions => Fig. 4

satelettronica

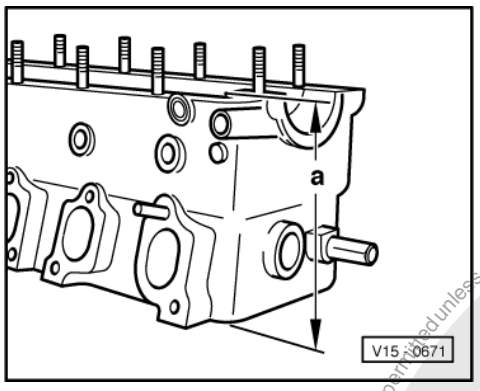


-> Fig. 1 Reworking cylinder head sealing surface

Cylinder head reworking dimension:
a = At least 132.6 mm

***Note:***

*When the sealing surface has been reworked, the valves must be set deeper by the same amount (rework valve seat inserts), otherwise valves will contact pistons. Ensure when doing this that the permissible minimum dimension is maintained => Page 70 .*

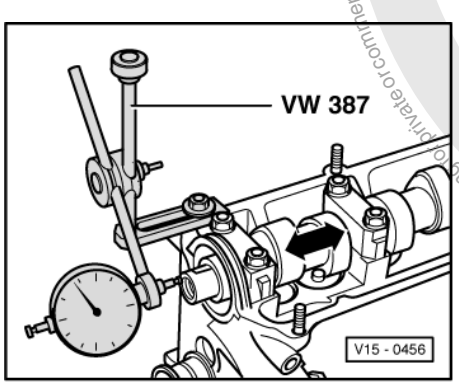


-> Fig. 2 Checking camshaft axial clearance

**Special tools, workshop equipment, testers, measuring instruments and auxiliary items required**

- Universal dial gauge bracket VW 387
- Dial gauge

Check with bucket tappets removed and with first and last bearing caps fitted.

Wear limit: max. 0.15 mm

Protected by copyright. Copying for private or commercial purposes, in part or in whole, is not permitted unless authorised by Volkswagen AG. Volkswagen AG does not guarantee or accept any liability with respect to the correctness of information in this document. Copyright by Volkswagen AG.
satelettronica

Protected by copyright. Copying for private or commercial purposes, in part or in whole, is not permitted unless authorised by Volkswagen AG. Volkswagen AG does not guarantee or accept any liability with respect to the correctness of information in this document. Copyright by Volkswagen AG.

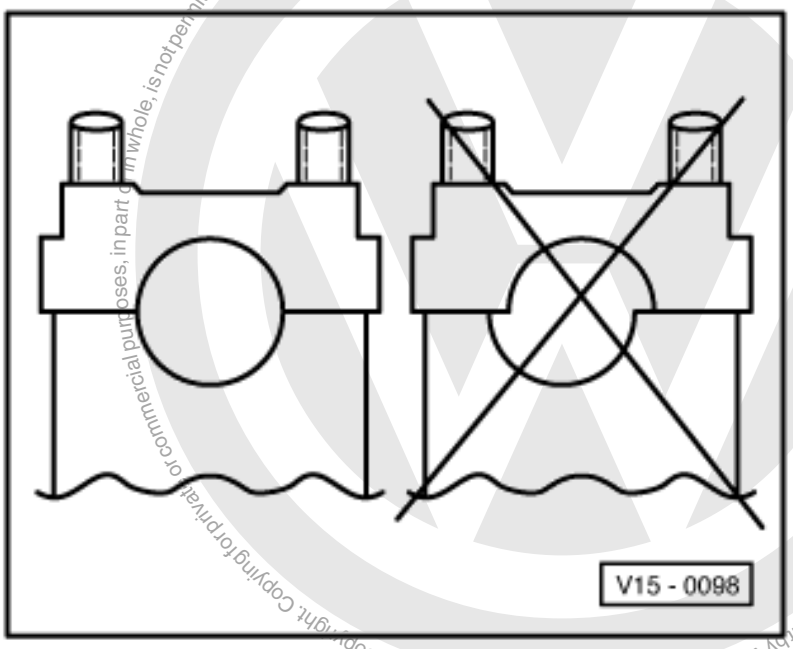


-> Fig. 3 Fitting position of camshaft bearing caps

Note offset. Before installing camshaft fit bearing caps and determine fitting position.

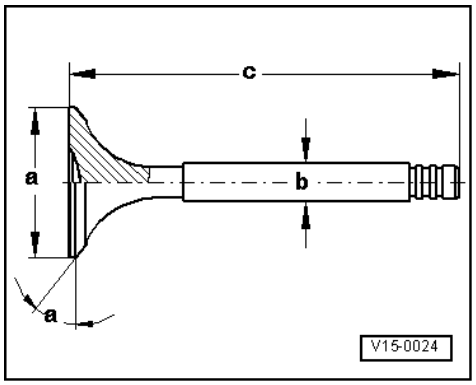


-> Fig. 4 Valve dimensions

*Note:*

*Valves must not be reworked. Only lapping-in is permitted.*

| Dimension | | Inlet valve | Exhaust valve |
|---|---|---|---|
| øa | mm | 39.5 ±0.15 | 32.9 ±0.15 |
| øb | mm | 6.92 ±0.02 | 6.92 ±0.02 |
| c | mm | 91.85 | 91.15 |
| α | <° | 45 | 45 |

satelettronica

## 2.2 - Reworking valve seats

**Special tools, workshop equipment, testers, measuring instruments and auxiliary items required**

- Depth gauge
- Valve seat refacing tool

*Notes:*

- When repairing engines with leaking valves, it is not always sufficient to reface or renew valve seats and valves. It is also necessary to check the valve guides for wear. This is particularly important on high mileage engines.
- The valve seats should only be reworked just enough to produce a perfect seating pattern. The maximum permissible reworking dimension must be calculated before work is carried out. If the reworking dimension is exceeded, the function of the hydraulic tappets can no longer be guaranteed and therefore the cylinder head should be renewed.

**The max. permissible reworking dimension is calculated as follows:**

- Insert valve and press firmly against seat.

*Note:*

*If the valve is to be renewed as part of a repair, use a new valve for the calculation.*

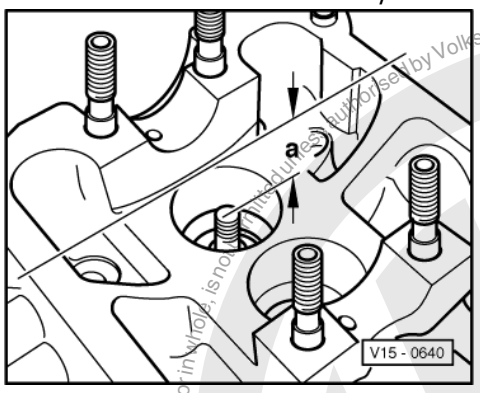


- -> Measure distance -a- between end of valve stem and upper edge of cylinder head.
- Calculate max. permissible reworking dimension from measured distance -a- and minimum dimension.

Minimum dimension:
Inlet valve 33.8 mm
Exhaust valve 34.1 mm

Measured distance minus minimum dimension
= max. permissible reworking dimension.

**Example:**

| | | | |
|---|---|---|---|
| - | Measured distance -a- | 35.1 | mm |
| | Minimum dimension | 34.1 | mm |
| = | max. perm. rework dimension* | 1.0 | mm |

*) The max. permissible reworking dimension is shown on illustrations for reworking valve seats as dimension "b".

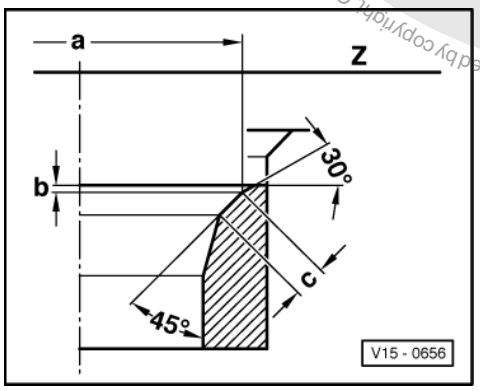


Protected by copyright. Copyright by Volkswagen AG.
Copyright by Volkswagen AG. Volkswagen AG does not guarantee or accept any liability with respect to the correctness of information in this document. Copying for private or commercial purposes, in part or in whole, is not permitted unless authorised by Volkswagen AG.
satelettronica

-> Reworking inlet valve seat

| Dim. | | Inlet valve seat |
|---|---|---|
| ø a | mm | 39.2 |
| b | mm | max. permissible reworking dim. |
| c | mm | approx. 2.0 |
| Z | | Cylinder head lower edge |
| 45° | | Valve seat angle |
| 30° | | Upper correction angle |

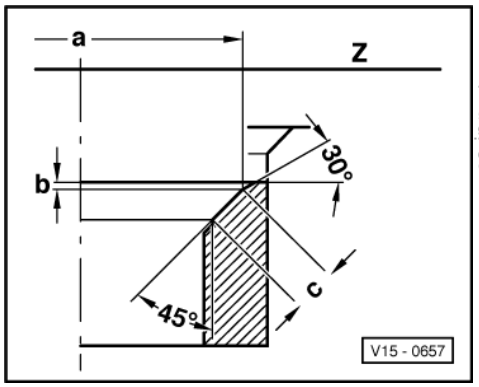


-> Reworking exhaust valve seat

| Dim. | | Exhaust valve seat |
|---|---|---|
| ø a | mm | 32.4 |
| ø b | mm | max. permissible reworking dim. |
| c | mm | approx. 2.4 |
| Z | | Cylinder head lower edge |
| 45° | | Valve seat angle |
| 30° | | Upper correction angle |

Protected by copyright. Copying for private or commercial purposes, in part or in whole, not permitted unless authorised by Volkswagen AG. Volkswagen AG does not guarantee or accept any liability with respect to the correctness of information in this document. Copyright by Volkswagen AG.
satelettronica

## 2.3 - Replacing camshaft oil seal

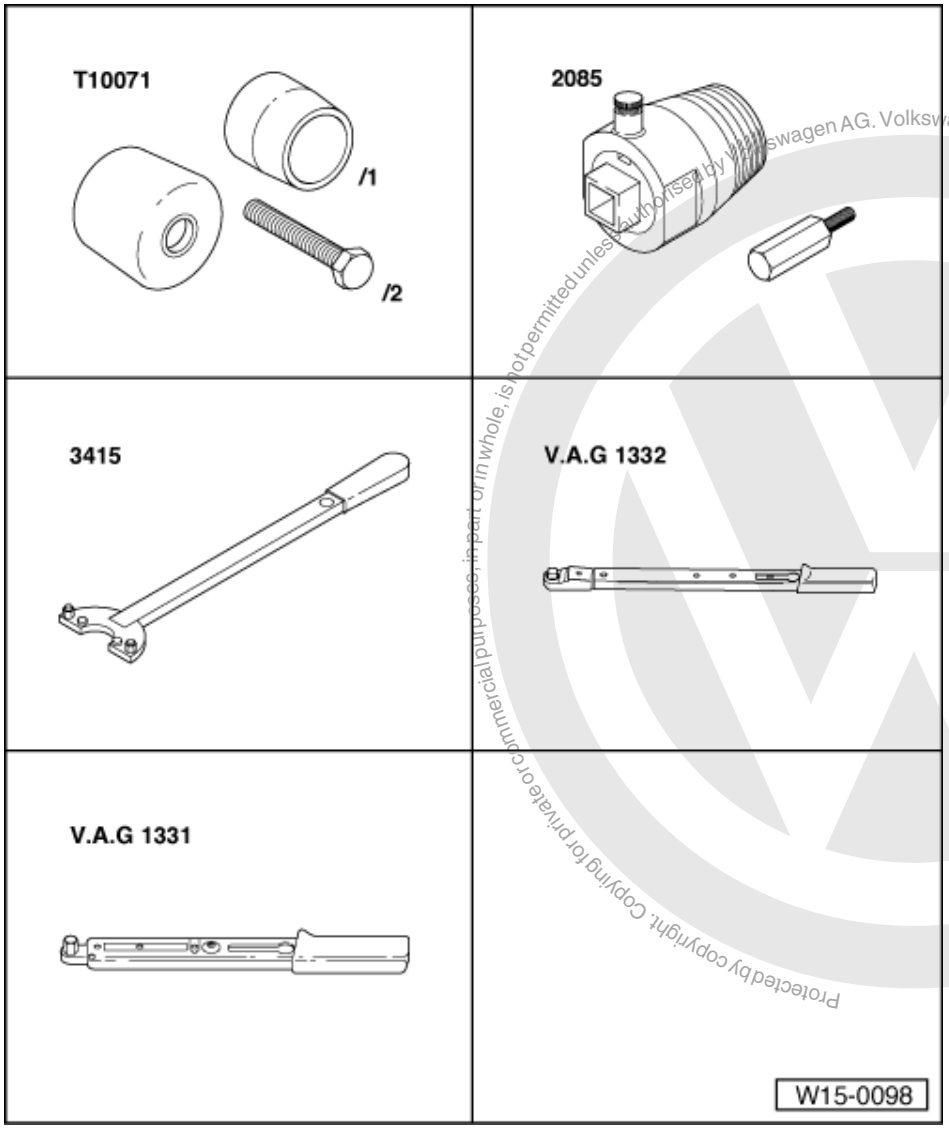


Protected by copyright. Copying for private or commercial purposes, in part or in whole, is not permitted unless authorised by Volkswagen AG. Volkswagen AG does not guarantee or accept any liability with respect to the correctness of information in this document. Copyright by Volkswagen AG.
satelettronica

### Special tools, workshop equipment, test and measuring appliances and auxiliary items required

- T10071 Puller
- 2085 Oil seal extractor
- 3415 Counter support
- V.A.G 1332 (40...200 Nm) Torque wrench
- V.A.G 1331 Torque wrench (5...50 Nm)

### Removing

- Remove toothed belt guard - upper part.

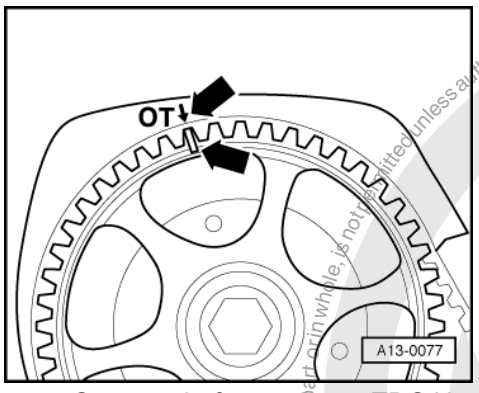


- -> Set camshaft sprocket to TDC No. 1 cylinder by turning the crankshaft. Mark on camshaft sprocket must align with arrow on toothed belt guard.
- Release tensioning roller and take toothed belt off camshaft sprocket.
- Turn crankshaft back slightly.

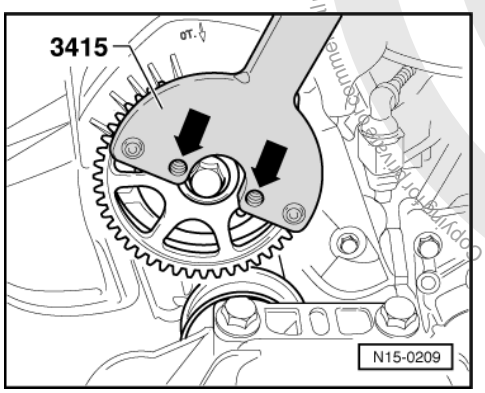


- -> Remove camshaft sprocket. When loosening camshaft sprocket bolt, counter-hold with 3415 (first remove bolts -arrows-).
- Remove woodruff key from the camshaft.
- Screw camshaft sprocket securing bolt fully into camshaft.
- Unscrew inner part of oil seal extractor 2085 two turns (approx. 3 mm) out of the outer part and lock in position with knurled screw.

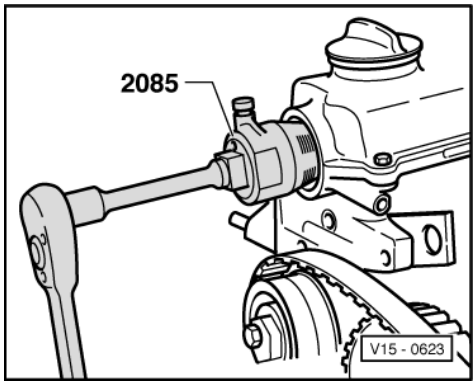


- -> Lubricate threaded head of oil seal extractor, place it in position and exerting firm pressure screw it into oil seal as far as possible.
- Loosen knurled screw and turn inner part of extractor against camshaft until oil seal has been extracted.
- Clamp flats of oil seal extractor in vice. Remove oil seal with pliers.

## Installing

### Conditions

- The pistons must not be positioned at TDC.

Protected by copyright. Copyright by Volkswagen AG. Volkswagen AG does not guarantee or accept any liability with respect to the correctness of information in this document. Copyright by Volkswagen AG. Reproduction of this document or in whole, is not permitted unless authorised by Volkswagen AG.
satelettronica

***Note:***

*Gradual introduction of PTFE oil seal (identifying characteristics: no annular spring, sealing lip wider). The sealing lip of this oil ring must not be oiled or lubricated. A plain encased seal of older construction (with annular spring) may be replaced with a PTFE oil seal, but not vice versa.*

- Position oil seal with guide sleeve T10071 and press in with press sleeve T10071/1 and bolt T10071/2.
- Insert woodruff key in camshaft.

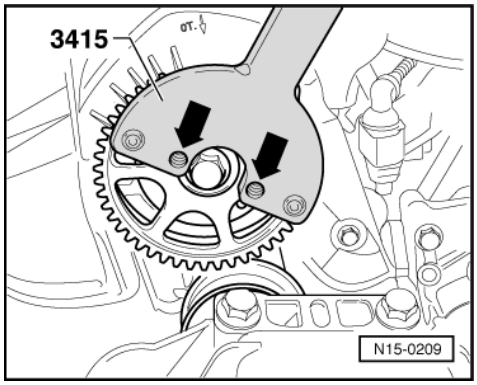


- -> Install the camshaft sprocket. Counter-hold with 3415 to tighten the camshaft sprocket securing bolt (first remove bolts -arrows-).
  Tightening torque: 100 Nm

***Note:***

*When the camshaft is turned, the crankshaft must not be at TDC. Danger of damage to valves or piston crowns.*

The rest of the assembly is basically a reverse of the dismantling sequence.

Installing toothed belt and adjusting valve timing => Page 55 .

Protected by copyright. Copying for private or commercial purposes, in part or in whole, is not permitted unless authorised by Volkswagen AG. Volkswagen AG does not guarantee or accept any liability with respect to the correctness of information in this document. Copyright by Volkswagen AG.

satelettronica

## 2.4 - Removing and installing camshaft

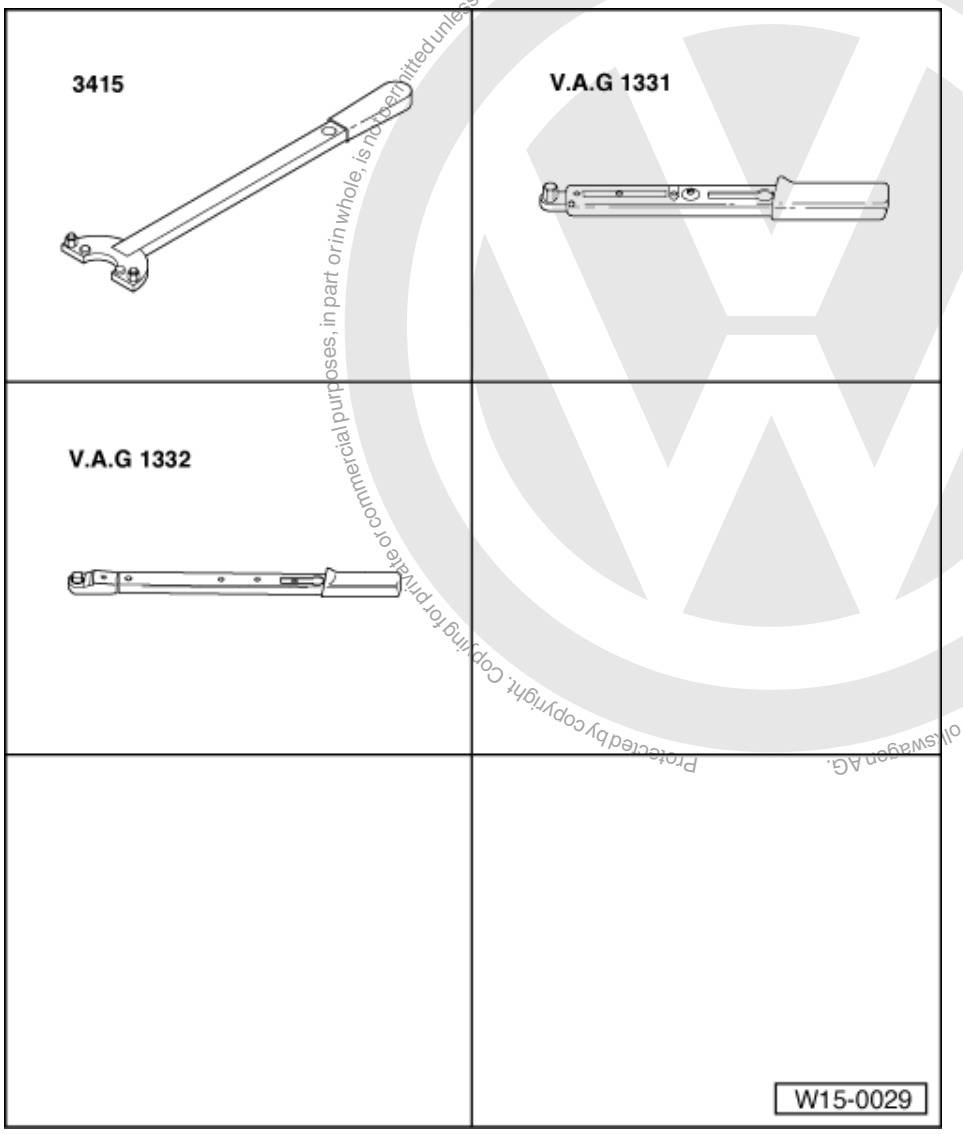


### Special tools, workshop equipment, test and measuring appliances and auxiliary items required

- 3415 Counter support
- V.A.G 1331 Torque wrench (5...50 Nm)
- V.A.G 1332 (40...200 Nm) Torque wrench
- AMV 174 004 01 Sealant

### Removing

- Remove intake manifold upper part:

satelettronica

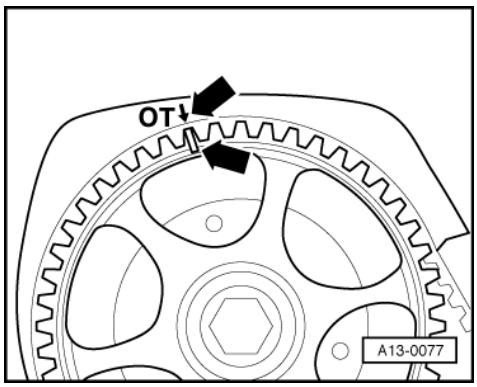


=> Repair group 24; Servicing injection system; Removing and installing parts of injection system Servicing injection system Removing and installing parts of injection system

*Note:*

*Seal the intake ports in the intake manifold lower part with a clean cloth.*

- Remove toothed belt guard upper part.
- -> Set camshaft sprocket to TDC No. 1 cylinder by turning the crankshaft. Mark on camshaft sprocket must align with arrow on toothed belt guard.
- Release tensioning roller and take toothed belt off camshaft sprocket.

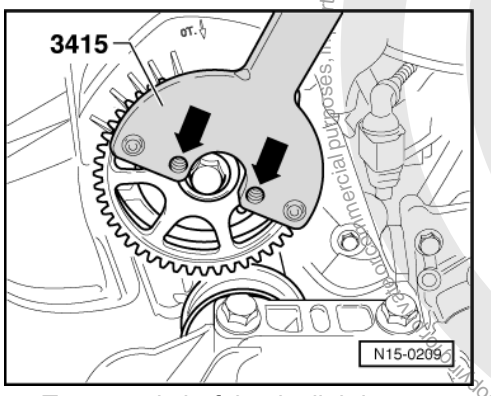


- Turn crankshaft back slightly.
- -> Remove camshaft sprocket. When loosening camshaft sprocket bolt, counter-hold with 3415 (first remove bolts -arrows-).
- Remove woodruff key from camshaft.
- Remove cylinder head cover.
- First remove bearing caps 5, 1 and 3. Then loosen bearing caps 2 and 4 alternately and diagonally.

Protected by copyright. Copying for private or commercial purposes, in part or in whole, is not permitted unless authorised by Volkswagen AG. Volkswagen AG does not guarantee or accept any liability with respect to the correctness of information in this document. Copyright by Volkswagen AG.
satelettronica

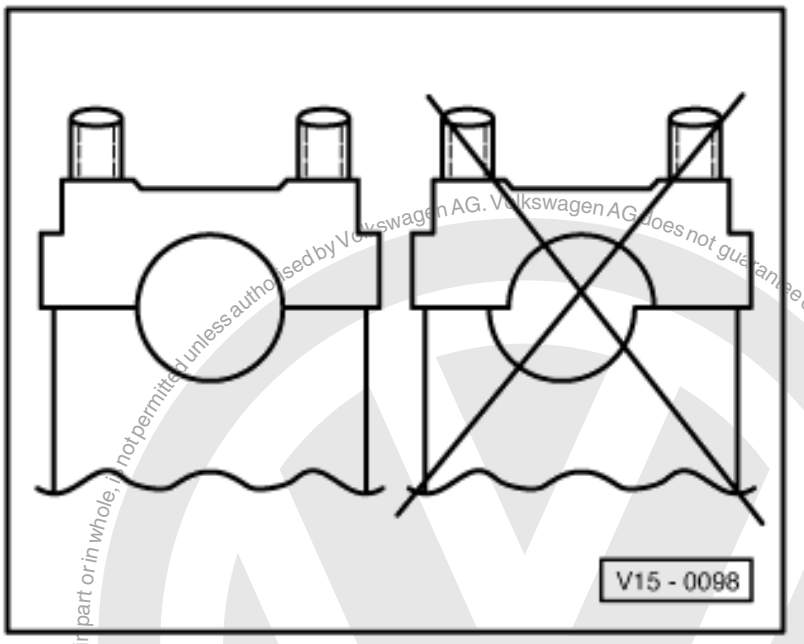


Protected by copyright. Copying for private or commercial purposes, in part or in whole, is not permitted unless authorised by Volkswagen AG. Volkswagen AG does not guarantee or accept any liability with respect to the correctness of information in this document. Copyright by Volkswagen AG.

satelettronica

Installing

Conditions

- The pistons must not be positioned at TDC.

*Notes:*

- When installing the camshaft No. 1 cylinder cams must point upwards.
- -> When installing the bearing cap note offset, before installing camshaft fit bearing caps and determine fitting position.

Work sequence

- Oil the camshaft contact surfaces.
- Fit camshaft.
- Tighten bearing caps 2 and 4 alternately and diagonally to
  20 Nm.
- Coat contact surfaces of bearing cap 1 lightly with sealant AMV 174 004 01.
- Install bearing caps 3, 1 and 5 and tighten to
  20 Nm.
- Position oil seal with guide sleeve T10071 and press in with press sleeve T10071/1 and bolt T10071/2.

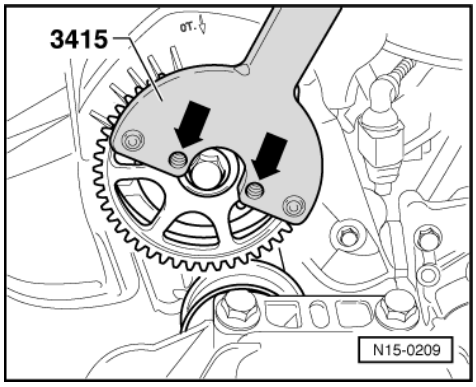

- Insert woodruff key in camshaft.
- -> Install the camshaft sprocket. Counter-hold with 3415 to tighten the camshaft sprocket securing bolt (first remove bolts -arrows-).
  Tightening torque: 100 Nm

*Note:*

*When the camshaft is turned, the crankshaft must not be at TDC. Danger of damage to valves or piston crowns.*

The rest of the assembly is basically a reverse of the dismantling sequence.

Installing toothed belt and adjusting valve timing => Page 55 .

*Note:*

*When new tappets have been installed the engine must not be started for about 30 minutes. Hydraulic compensation elements must settle (otherwise valves will strike pistons).*

## 2.5 - Checking hydraulic bucket tappets

**Special tools, workshop equipment, testers, measuring instruments and auxiliary items required**

- Feeler gauge
- Wood or plastic wedge

*Notes:*

- Renew defective tappet complete (cannot be adjusted or repaired).
- Irregular valve noises when starting engine are normal.

**Test sequence**

- Start engine and run until the radiator fan has switched on once.
- Increase engine speed to about 2500 rpm for approx. 2 minutes.

If the hydraulic tappets are still noisy, locate defective tappets as follows:

- Remove intake manifold upper part:

=> Repair group 24; Servicing injection system; Removing and installing parts of injection system Servicing injection system Removing and installing parts of injection system

*Note:*

*Seal the intake ports in the intake manifold lower part with a clean cloth.*

- Remove cylinder head cover.
- Rotate crankshaft clockwise, until cam of the tappet to be checked is pointing upwards.
- Determine play between cam and bucket tappet.
- If the play is in excess of 0.2 mm, renew bucket tappet. If the play is less than 0.1 mm or no play, proceed with check as follows:

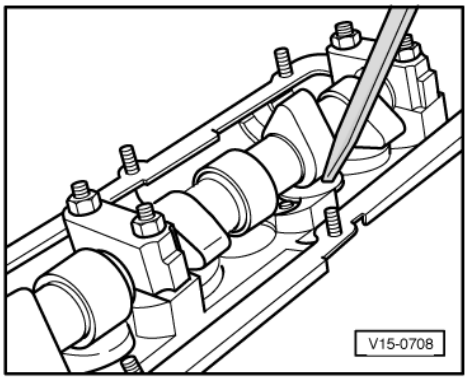


Protected by copyright. Copying or distribution, in whole or in part, is not permitted unless authorised by Volkswagen AG. Volkswagen AG does not guarantee or accept any liability with respect to the correctness of information in this document. Copyright by Volkswagen AG.

satelettronica

- -> Push bucket tappet down lightly with a wooden or plastic wedge. If when the bucket tappet is pushed down a 0.2 mm thick feeler gauge can be pushed between the camshaft and bucket tappet, the bucket tappet is to be replaced.

***Note:***

*After installing new tappets the engine must not be started for approx. 30 minutes. Hydraulic compensation elements must settle (otherwise valves will strike pistons).*

## 2.6 - Checking valve guides

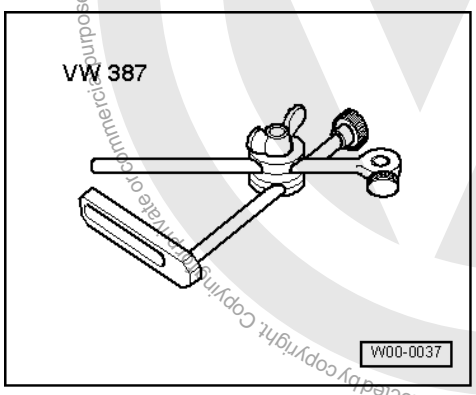


**Special tools, workshop equipment, testers, measuring instruments and auxiliary items required**

- VW 387 Universal dial gauge bracket
- Dial gauge

**Test sequence**

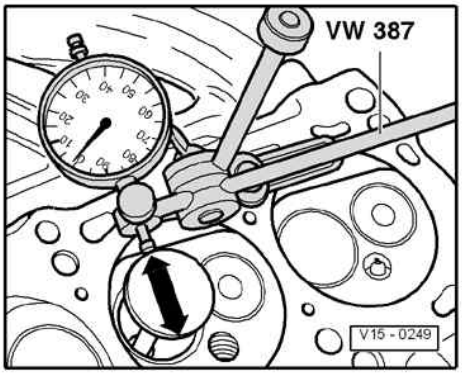


- -> Insert new valve into guide until end of valve stem is flush with end of guide. Due to the slight difference in stem dimensions, ensure that only an inlet valve is used in the inlet guide and an exhaust valve in the exhaust guide.
- Determine rock.
  Wear limit:
  Inlet valve guide = 1.0 mm
  Exhaust valve guide = 1.3 mm

Protected by copyright. Copying for private or commercial purposes, in part or in whole, is not permitted unless authorised by Volkswagen AG. Volkswagen AG does not guarantee or accept any liability with respect to the correctness of information in this document. Copyright by Volkswagen AG.
satelettronica

## 2.7 - Renewing valve guides

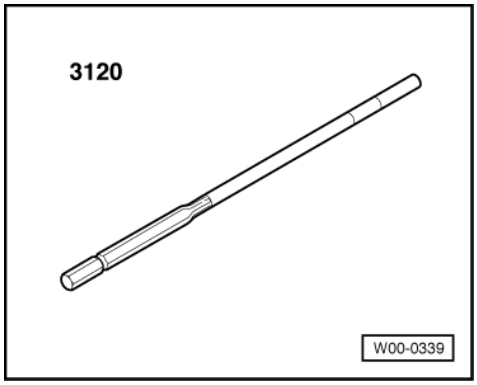


**Special tools, workshop equipment, testers, measuring instruments and auxiliary items required**

- 3120 Reamer and cutting fluid

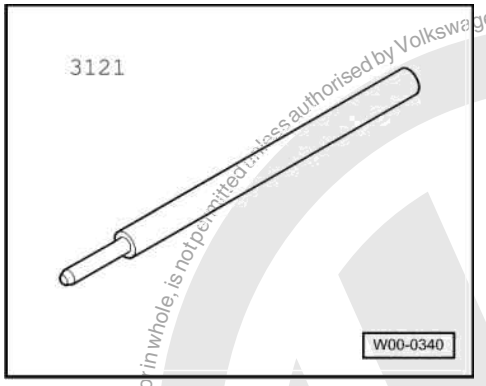


- 3121 Drift

**Removing**

- Clean and check cylinder head. Cylinder heads in which the valve seats can no longer be reworked, or cylinder heads which have already been machined to the minimum dimension, should not have the valve guides replaced.
  The permissible minimum dimension must be maintained =>Page 68 , Fig. 1
- Press out worn valve guides with 3121 from the camshaft side (valve guides with shoulder - repair version - from the combustion chamber side).

**Installing**

- Press in new guides, moistened with oil, from camshaft side onto shoulder in cold cylinder head using drift 3121.

***Note:***

*When the shoulder on guide makes contact, the pressure must not exceed 1.0 t otherwise shoulder may break off.*

- Ream guides out with hand reamer 3120 using plenty of cutting fluid.
- Rework valve seats => Page 70 .

Copyright by Volkswagen AG. Volkswagen AG does not guarantee or accept any liability with respect to the correctness of information in this document. Copying for private or commercial purposes, in part or in whole, is not permitted unless authorised by Volkswagen AG.
Protected by copyright. Copying for private or commercial purposes, in part or in whole, is not permitted unless authorised by Volkswagen AG.
satelettronica

## 2.8 - Renewing valve stem seals

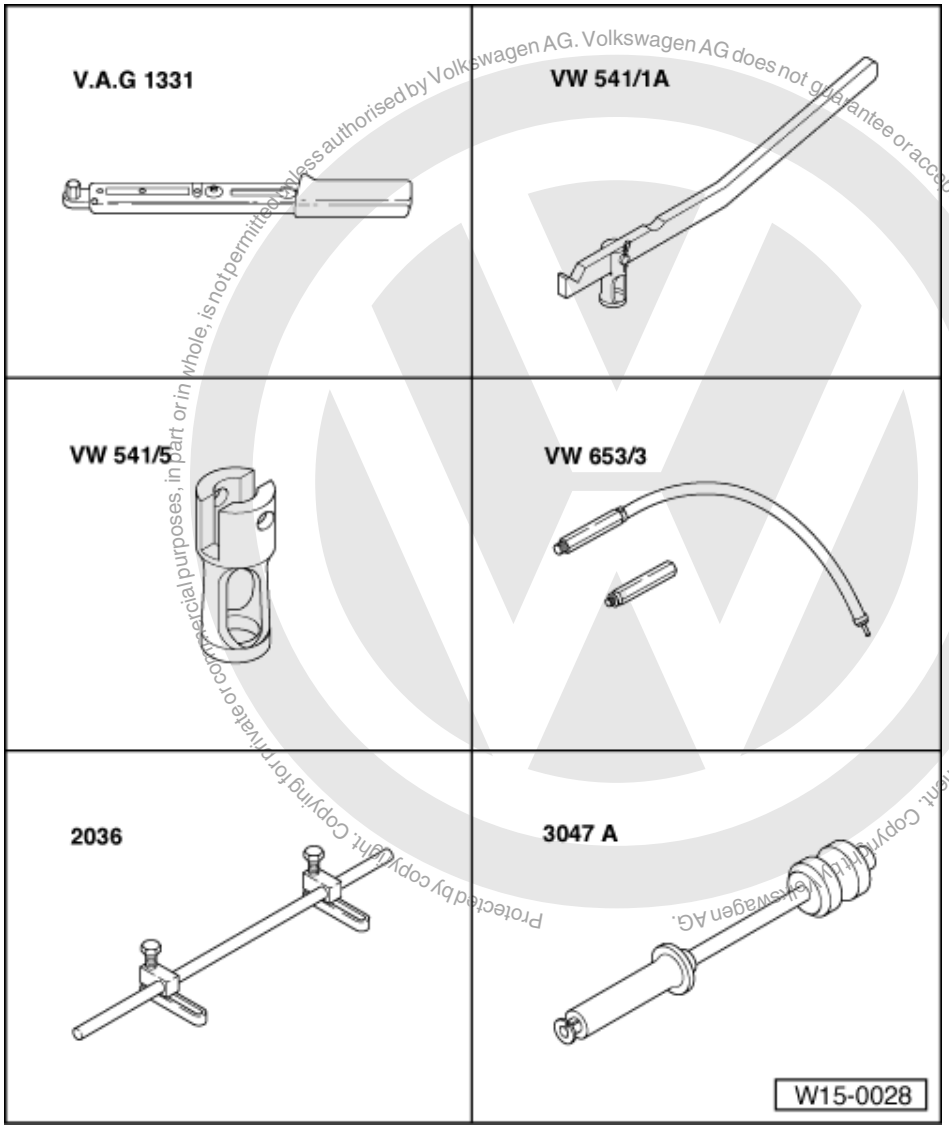


Protected by copyright. Copying for private or commercial purposes, in part or in whole, is not permitted unless authorised by Volkswagen AG. Volkswagen AG does not guarantee or accept any liability with respect to the correctness of information in this document. Copyright by Volkswagen AG.

satelettronica

**Special tools, workshop equipment, test and measuring appliances and auxiliary items required**

- V.A.G 1331 Torque wrench (5...50 Nm)
- VW 541/1A Valve lever
- VW 541/5 Thrust piece
- VW 653/3 Pressure hose
- 2036 Assembly appliance
- 3047A Puller

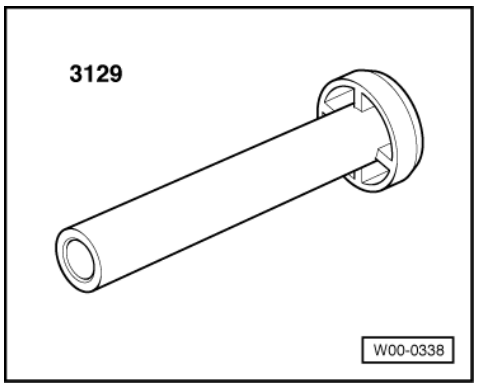


- 3129 Fitting tool

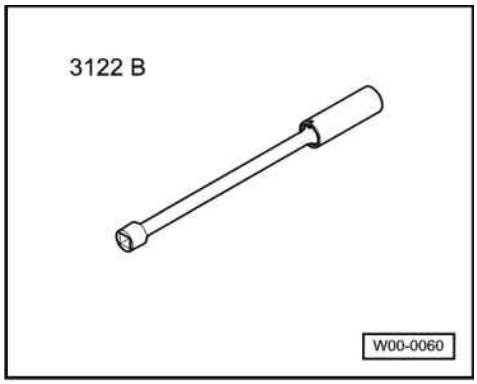


- 3122 B Plug spanner

## Removing

(with cylinder head fitted)

- Remove camshaft => Page 75 .
- Remove the bucket tappets and place them with the contact surface downwards. When doing this ensure that the tappets are not interchanged.
- Remove spark plugs.
- Set piston of appropriate cylinder to "bottom dead centre".

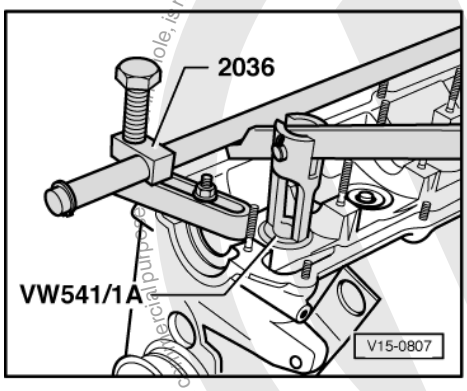


- -> Fit assembly tool 2036 and adjust mountings to height of studs.
- Screw pressure hose VW 653/3 into the spark plug thread.
- Connect pressure hose to a compressed air system of at least 6 bar.
- Remove valve springs with lever VW 541/1A and press piece VW 541/5.

satelettronica
Protected by copyright. Copying for private or commercial purposes, in part or in whole, is not permitted unless authorised by Volkswagen AG. Volkswagen AG does not guarantee or accept any liability with respect to the correctness of information in this document. Copyright by Volkswagen AG.

*Note:*

*Tight cotters can be loosened by tapping lightly on the lever.*

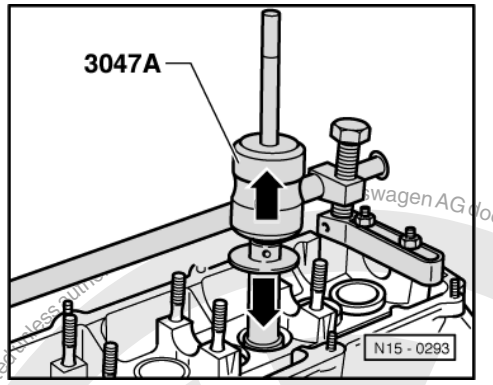


- -> Pull off valve stem seals with 3047A.

Installing

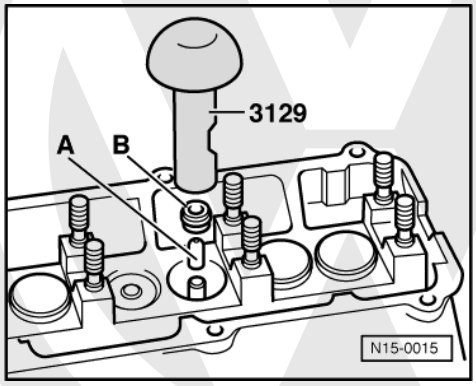


- -> Place the plastic sleeve -A- supplied on the appropriate valve stem. This will prevent the new valve stem seal -B- being damaged.
- Insert new valve stem seal in fitting tool 3129.
- Oil valve stem seal sealing lip and press carefully onto the valve guide.

Protected by copyright. Copying for private or commercial purposes, in part or in whole, is not permitted unless authorised. Volkswagen AG does not guarantee or accept any liability with respect to the correctness of information in this document. Copyright by Volkswagen AG.
satelettronica

# 17 - Lubrication

## 1 - Removing and installing parts of the lubrication system

### 1.1 - Removing and installing parts of the lubrication system

*Notes:*

- If when repairing an engine, metal shavings or a large quantity of small metal particles are found, this could indicate that the crankshaft and conrod bearings are damaged. To prevent consequential damage perform the following repairs:
  - Thoroughly clean oil passages
  - Replace oil spray jets
  - Replace oil cooler
  - Replace oil filter
- The oil level must not be above the max. mark - danger of damage to catalyst!
  Marking => Page 92 , Fig. 1

Checking oil pressure => Page 94

**Oil system capacity1):**

with oil filter 4.5 ltrs.

1) Up-to-date figures:

=> Exhaust emissions test binder

**Engine oil specifications:**

Use engine oils to VW standard 500 00, 501 01 or 502 00. Only in exceptional cases: Multi-grade oils corresponding to ACEA A2/A3.

Protected by copyright. Copying for private or commercial purposes, in part or in whole, is not permitted unless authorised by Volkswagen AG. Volkswagen AG does not guarantee or accept any liability with respect to the correctness of information in this document. Copyright by Volkswagen AG.
satelettronica

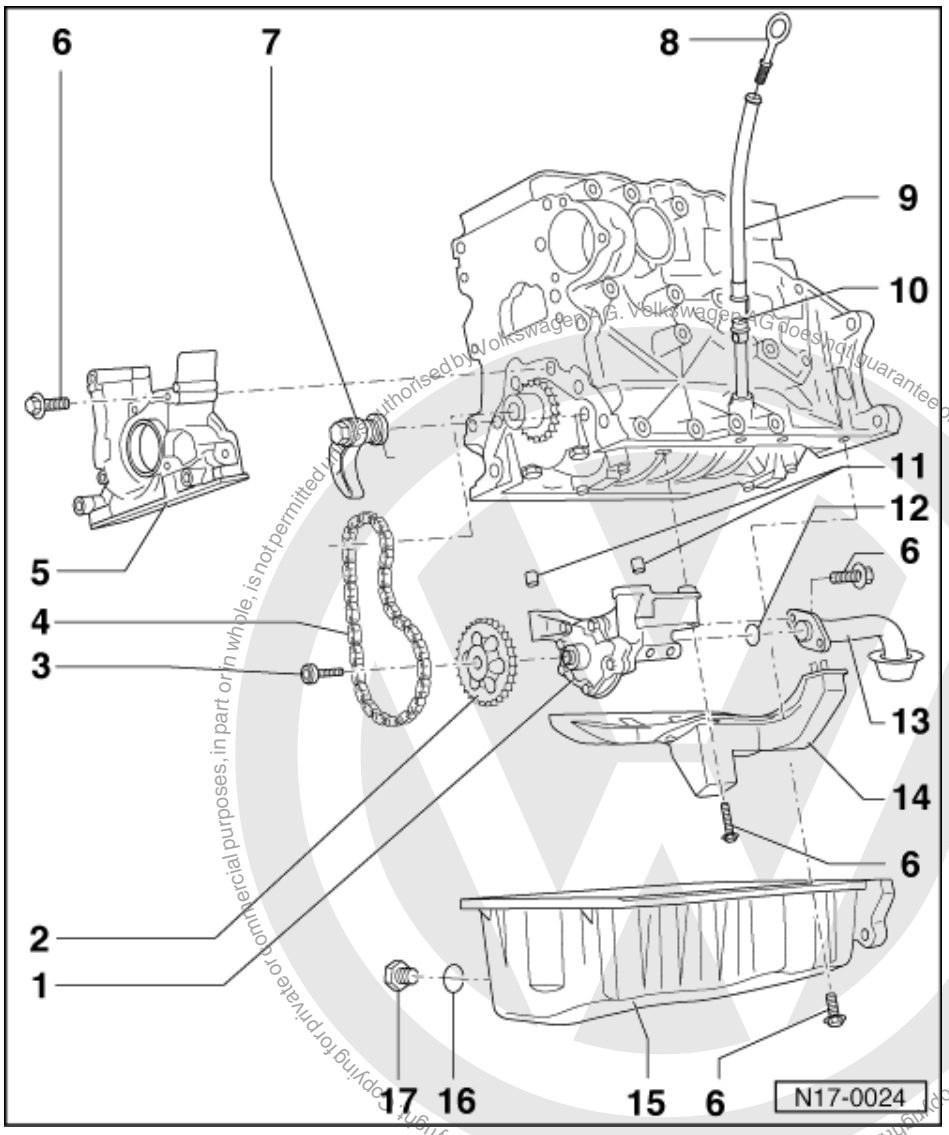


Protected by copyright. Copying for private or commercial purposes, in part or in whole, is not permitted unless authorised by Volkswagen AG. Volkswagen AG does not guarantee or accept any liability with respect to the correctness of information in this document. Copyright by Volkswagen AG.

satelettronica

**Part I**

Part II Dismantling oil filter bracket

=> Page 89

1 **Oil pump**
- With pressure relief valve of 12 bar
- Before installing, check that both dowel sleeves for centralizing oil pump/cylinder head are fitted
- Renew if running surfaces and gears are scored

2 **Chain sprocket**

3 **20 Nm**

4 **Chain**

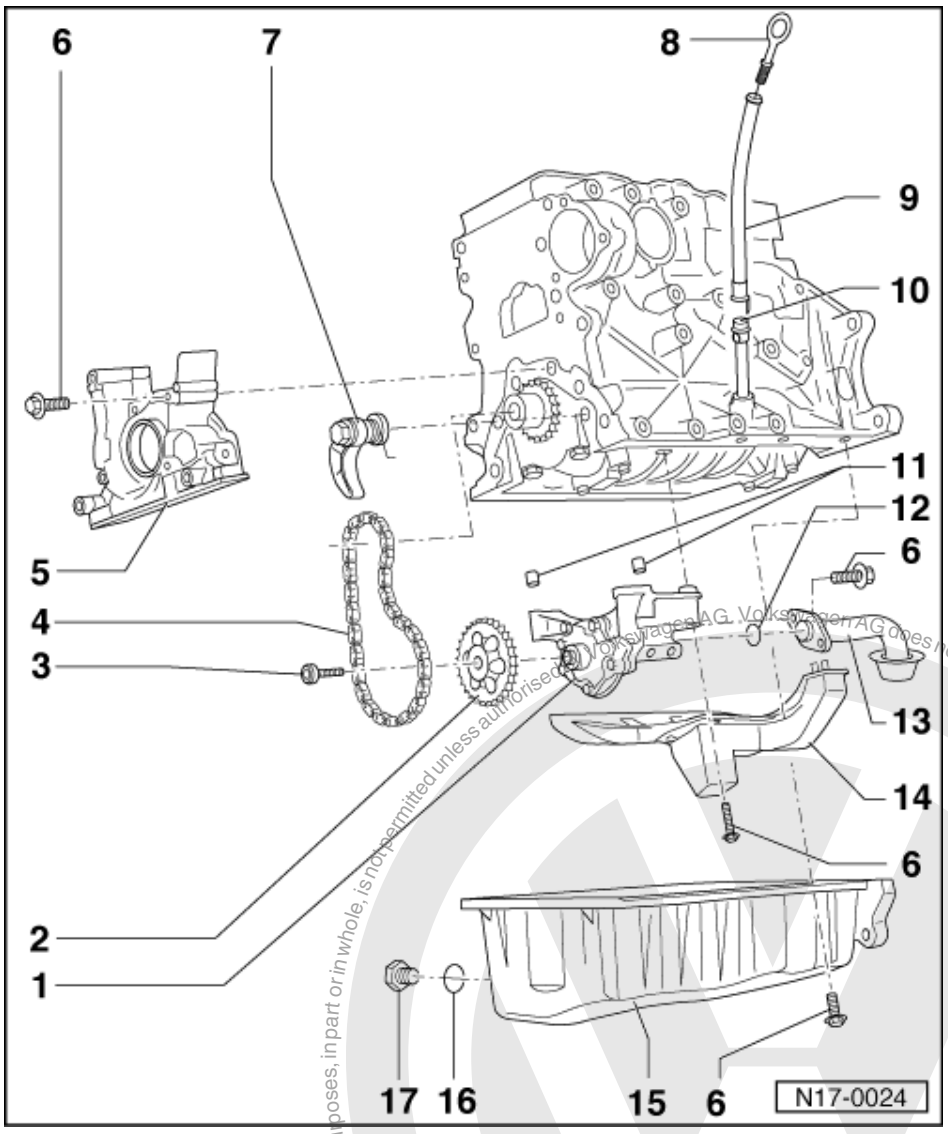


5 Sealing flange
- Removing and installing => Page 34
- Insert with silicone sealant D 176 404 A2 => Page 34
- Renewing crankshaft oil seal - pulley end => Page 31

6 15 Nm

7 Chain tensioner with tensioning rail, 15 Nm
- When installing, pretension spring and fit

8 Dipstick
- The oil level must not be above the max. mark!
- Markings=> Page 92 , Fig. 1

Protected by copyright. Copying for private or commercial purposes, in part or in whole, is not permitted unless authorised by Volkswagen AG. Volkswagen AG does not guarantee or accept any liability with respect to the correctness of information in this document. Copyright by Volkswagen AG.
satelettronica

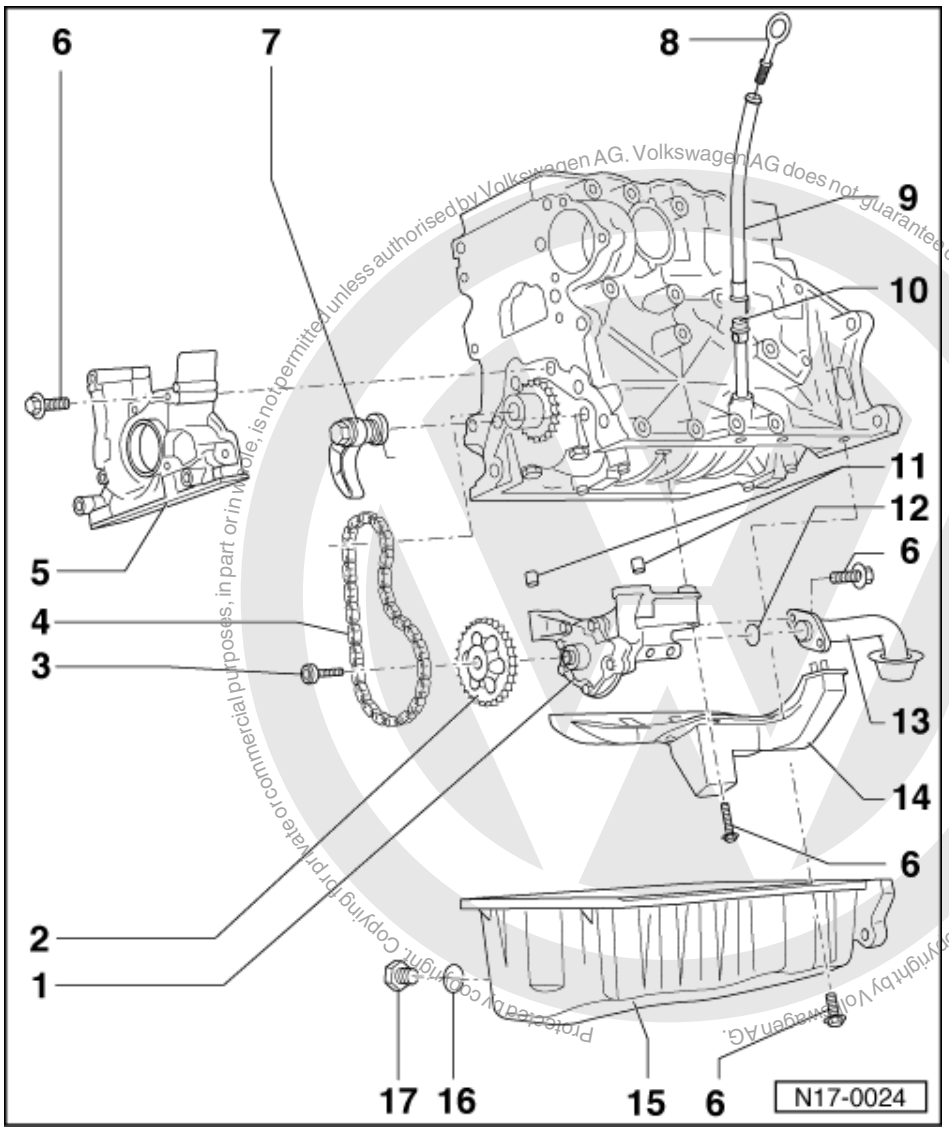


Protected by copyright. Copying for private or commercial purposes, in part or in whole, is not permitted unless authorised by Volkswagen AG. Volkswagen AG does not guarantee or accept any liability with respect to the correctness of information in this document. Copyright by Volkswagen AG.

9 Guide
- Pull off to extract oil

10 Guide tube

11 Dowel sleeves

12 O-ring
- Renew

13 Suction pipe
- Clean strainer if soiled

14 Baffle plate

15 Sump
- Clean sealing surface before installing
- Install with silicone sealant
  D 176 404 A2
  => Page 92

satelettronica

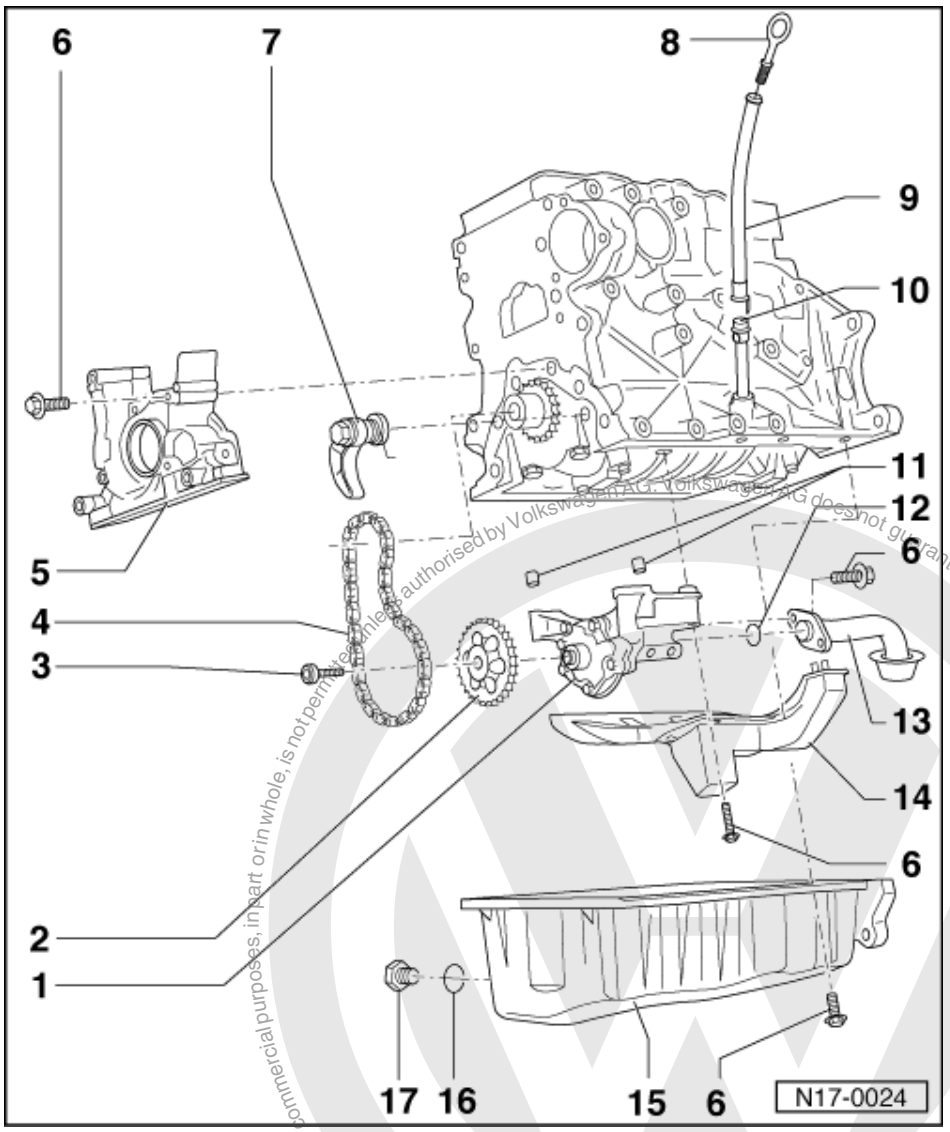


16 Seal

- Renew

17 Oil drain plug, 30 Nm

- Renew plug with attached seal

Protected by copyright. Copying for private or commercial purposes, in part or in whole, is not permitted unless authorised by Volkswagen AG. Volkswagen AG does not guarantee or accept any liability with respect to the correctness of information in this document. Copyright by Volkswagen AG.
satelettronica

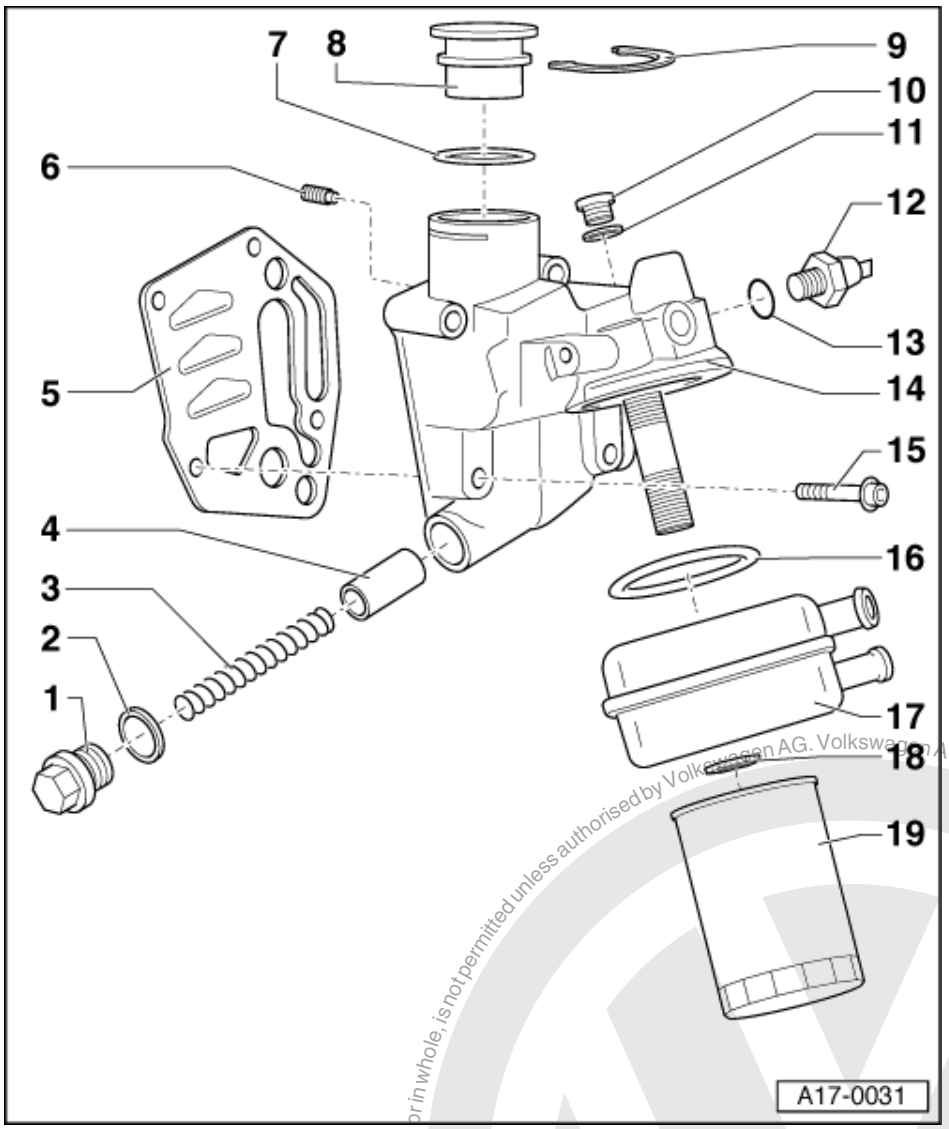


Part II

1 Sealing plug, 40 Nm
- Renew

2 Seal
- Fits firmly on item 1

3 Spring
- For pressure relief valve, approx. 4 bar

4 Piston
- For pressure relief valve, approx. 4 bar

5 Gasket
- Renew

6 Non-return valve, 8 Nm

7 Seal
- Fit onto sealing cap shoulder -item 8 -

Protected by copyright. Copying for private or commercial purposes, in part or in whole, is not permitted unless authorised by Volkswagen AG. Volkswagen AG does not guarantee or accept any liability with respect to the correctness of information in this document. Copyright by Volkswagen AG.
satelettronica

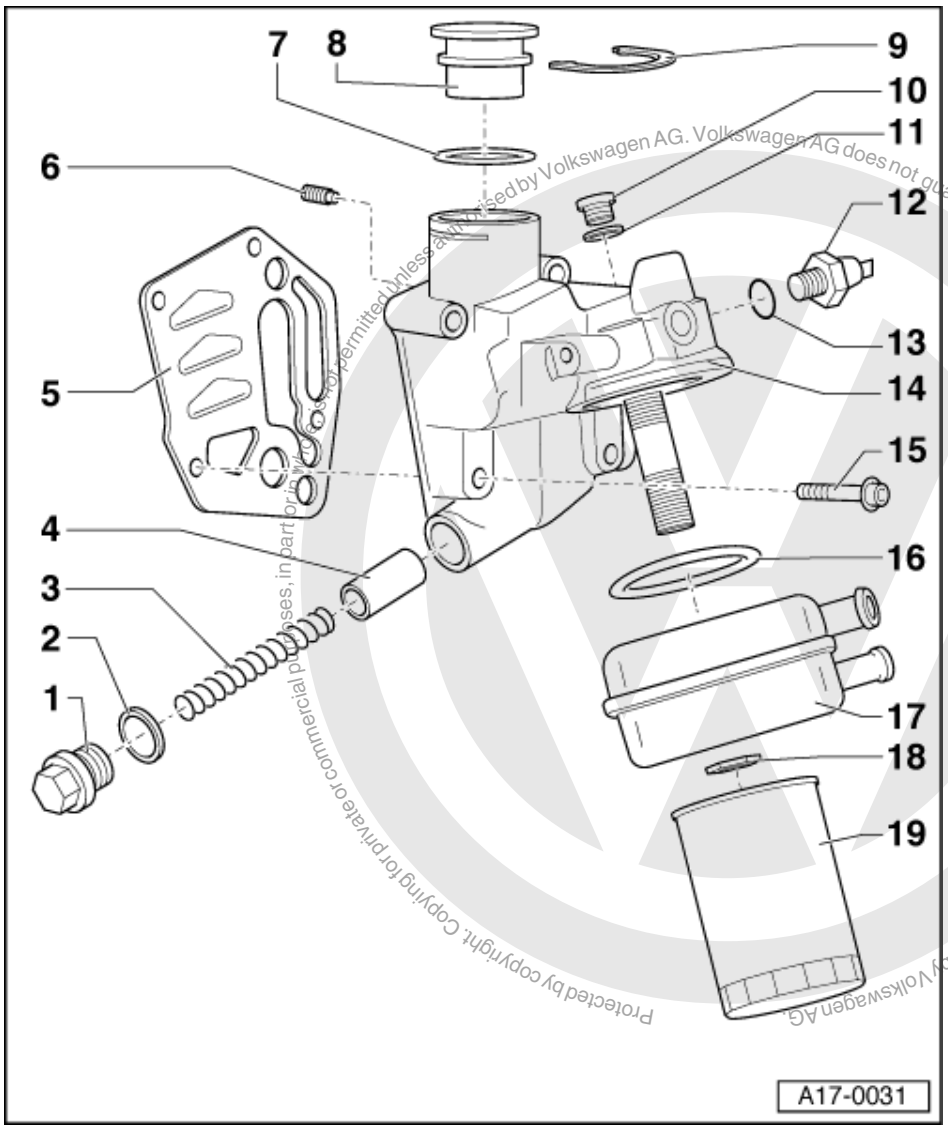


Protected by copyright. Copying for private or commercial purposes, in part or in whole, is not permitted unless authorised by Volkswagen AG. Volkswagen AG does not guarantee or accept any liability with respect to the correctness of information in this document. Copyright by Volkswagen AG.

satelettronica

8 Sealing cap

9 Retaining clip

10 Sealing plug, 15 Nm

11 Seal

- If sealing ring is leaking nip open and replace.

12 1.4 bar oil pressure switch (F1), 25 Nm

- Black
- Checking => Page 94

13 Seal

- If sealing ring is leaking nip open and replace.

14 Oil filter bracket

15 15 Nm + 1/4 turn (90 °) further

- Renew

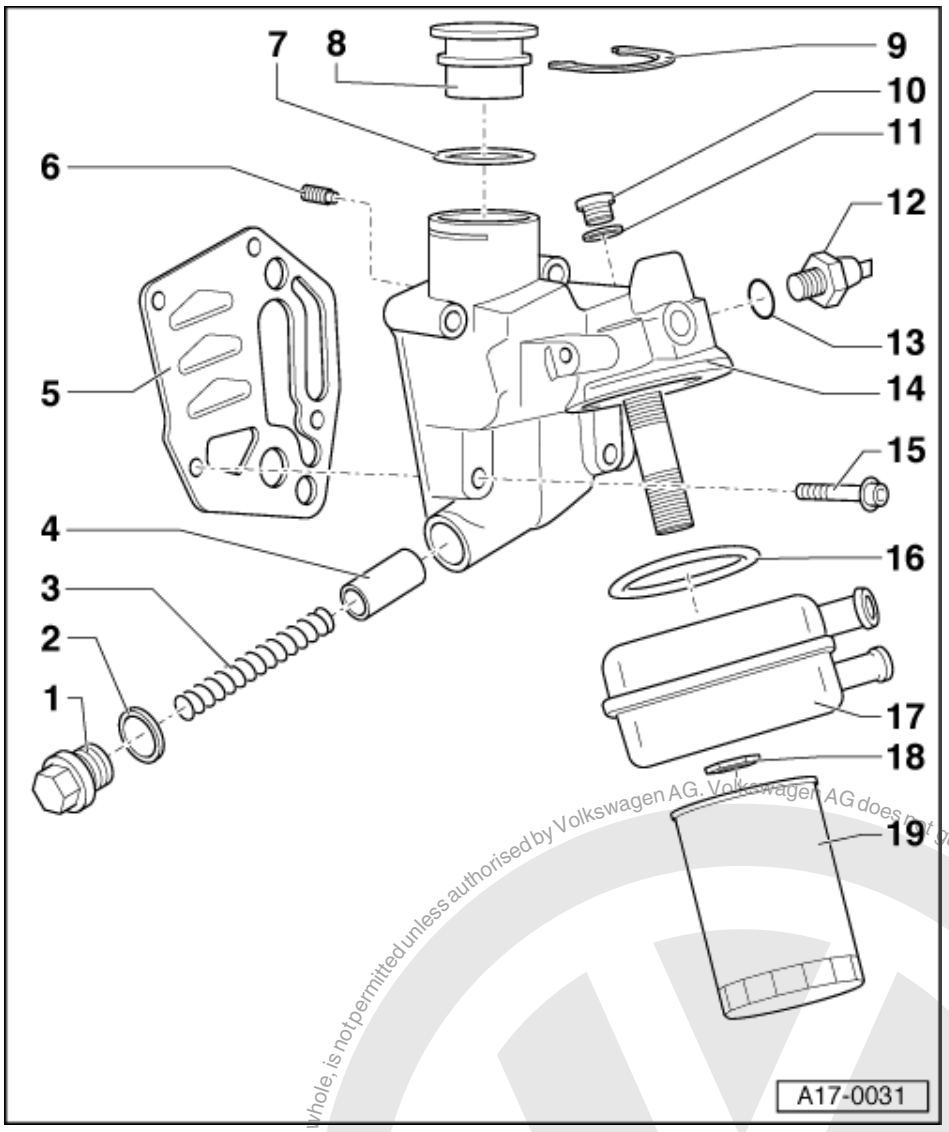


16 Gasket

- Renew
- Fit into groove on oil cooler

17 Oil cooler

- Ensure clearance to adjacent components
- See note
  => Page 84

18 25 Nm

19 Oil filter

- Loosen with strap wrench
- Tighten by hand
- Observe installation instructions on oil filter

Protected by copyright. Copying for private or commercial purposes, in part or in whole, is not permitted unless authorised by Volkswagen AG. Volkswagen AG does not guarantee or accept any liability with respect to the correctness of information in this document. Copyright by Volkswagen AG.
satelettronica

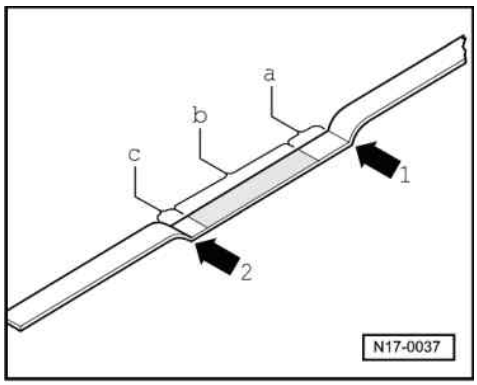


-> Fig. 1 Markings on oil dipstick

1 - max. mark
2 - min. mark
a - Area above hatched field up to max. mark: Do not replenish with engine oil!
b - Oil level within hatched field: can be replenished with engine oil
c - Area from min. mark up to hatched field: replenish with max. 0.5 ltr. of engine oil!

## 1.2 - Removing and installing sump

### Special tools, workshop equipment, testers, measuring instruments and auxiliary items required

- Hand drill with plastic brush
- Silicone sealant D176404 A2

### Removing

- Remove noise insulation tray.
- Drain engine oil.
- Remove sump, it may be necessary to release sump by tapping lightly with a rubber head hammer.

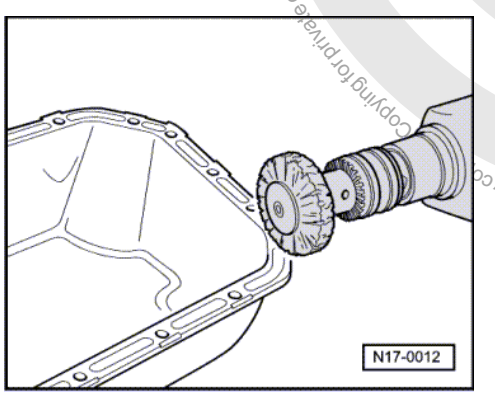


- Remove sealant residue on cylinder block with a flat scraper.
- -> Remove sealant residue on the sump with a rotating brush, e.g. a hand drill with a plastic brush (wear eye protection).
- Clean sealing surface, must be free of oil and grease.

### Installing

*Notes:*

- Note the use by date of the sealant.

Protected by copyright. Copying for private or commercial purposes, in part or in whole, is not permitted unless authorised by Volkswagen AG. Volkswagen AG does not guarantee or accept any liability with respect to the correctness of information in this document. Copyright by Volkswagen AG.
satelettronica

- Sump must be installed within 5 minutes of applying silicone sealing compound.

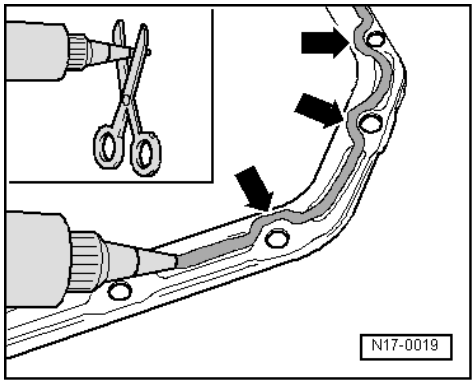


- -> Cut off tube nozzle at forward marking (nozzle approx. 3 mm ø).
- Apply silicone sealing compound, as shown, to clean sump sealing surface. Sealing compound bead must be.
  - 2...3 mm thick.
  - and run on inside of bolt holes -arrows-.

***Note:***

*The sealing compound bead must not be thicker, otherwise excess sealing compound will enter the sump and may block the oil suction pipe strainer.*

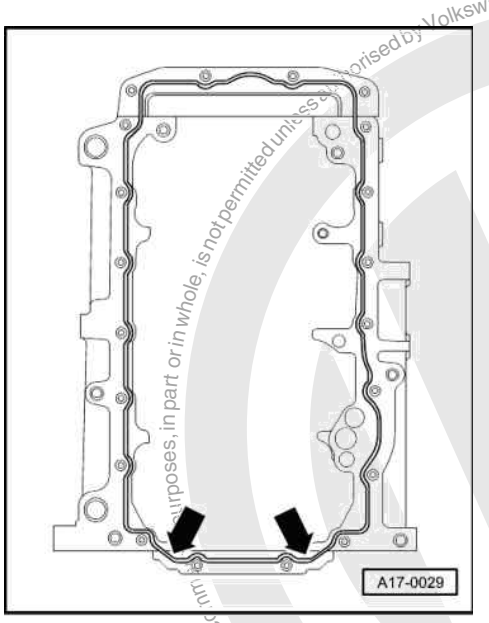


- -> Apply silicone sealing bead as shown to the clean sealing surface of the sump. (The illustration shows the position of the sealant bead on the cylinder block).
- Install sump immediately and tighten bolts as follows:

  1 - Tighten all bolts sump/cylinder block very lightly and diagonally.
  2 - Lightly tighten three bolts sump/gearbox.
  3 - Lightly tighten all bolts sump/cylinder block diagonally.
  4 - Tighten three bolts sump/gearbox to 25 Nm.
  5 - Tighten all bolts sump/cylinder block diagonally to 15 Nm.

***Notes:***

- When installing the sump on an engine which is out of vehicle, ensure that the sump is flush with cylinder block on flywheel end.
- The sealant must be allowed to drive approx. 30 minutes after fitting the sump. Only then can the engine be filled with engine oil.

satelettronica

The rest of the assembly is basically a reverse of the dismantling sequence.

## 1.3 - Checking oil pressure and oil pressure switch

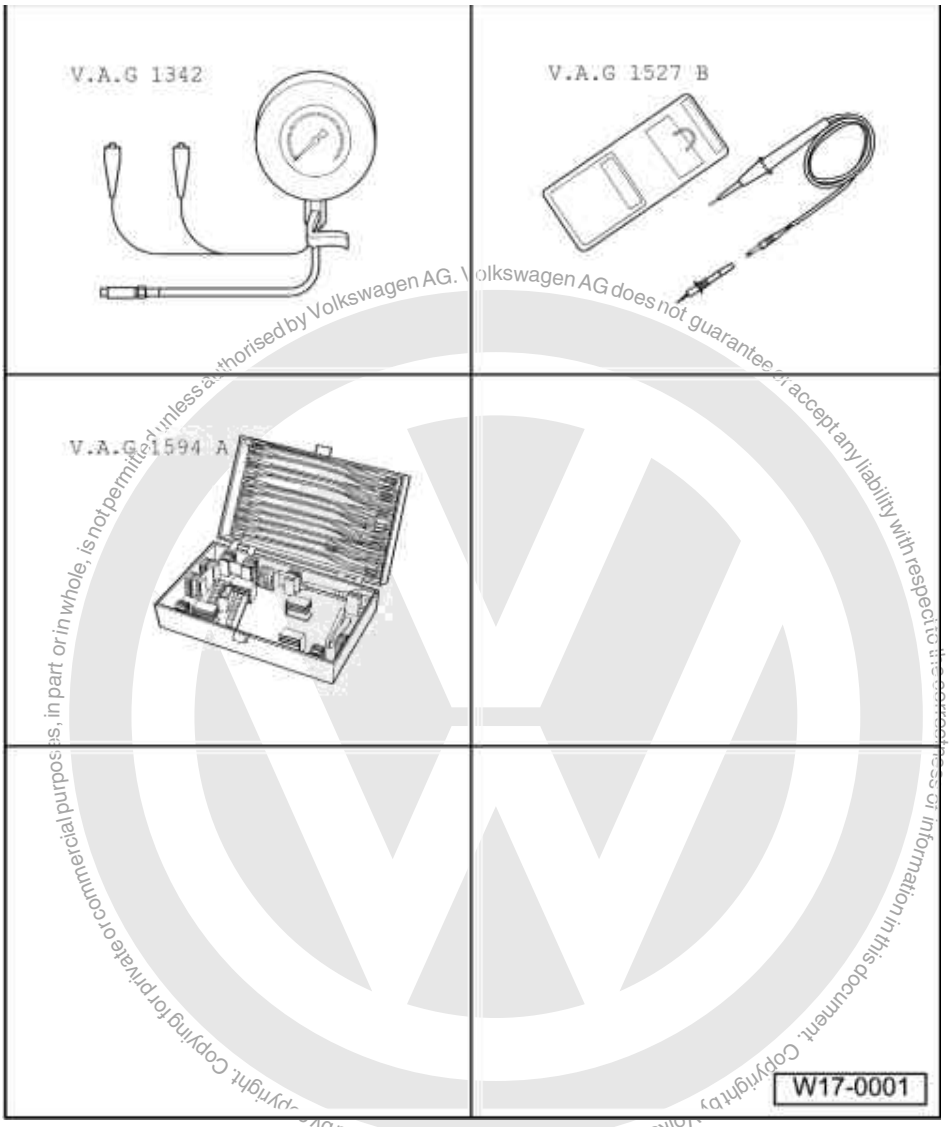


Copyright. Copying for private or commercial purposes, in part or in whole, is not permitted unless authorised by Volkswagen AG. Volkswagen AG does not guarantee or accept any liability with respect to the correctness of information in this document. Copyright by Volkswagen AG. Protected by copyright.

**Special tools, workshop equipment, test and measuring appliances and auxiliary items required**

- V.A.G 1342 Oil pressure tester
- V.A.G 1527 B Diode test lamp
- V.A.G 1594 A Adapter set

**Function of the dynamic oil pressure warning indicator**

When not under pressure, the oil pressure switch is open and will close when the operating pressure is attained.

The oil pressure warning will be activated
approx. 10 seconds
after switching the ignition on.

Switch-in delay of oil pressure warning
approx. 3 seconds.

Switch-off delay of oil pressure warning

satelettronica

approx. 5 seconds.

***Note:***

*Functional check and servicing the optical and acoustic oil pressure warning:*

=> Current flow diagrams, Electrical fault finding and Fitting locations

**Checking warning lamp**

After switching on the ignition and engine not started the oil pressure warning lamp in dash panel insert must light for
approx. 3 seconds
and then go out. The test will be terminated if the engine is running.

**Test conditions**

- Engine oil level OK, checking => Page 92
- Oil pressure warning lamp (K3) must light up for approx. 3 seconds when ignition is switched on
- Engine oil temperature at least 80 °C (radiator fan must have run once)

**Test sequence**

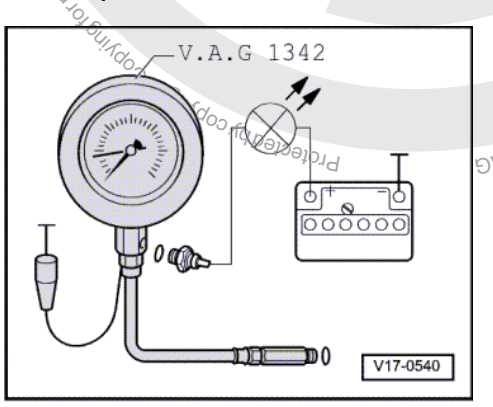


- -> Remove oil pressure switch (F1) and screw into tester.
- Screw tester into the oil filter bracket in place of the oil pressure switch.
- Connect brown wire of tester to earth (-).
- Connect diode test lamp V.A.G 1527 B using auxiliary cables from V.A.G 1594 A to battery positive (+) and oil pressure switch.
  LED must not light up.
- If the LED lights up, renew 1.4 bar oil pressure switch (F1) .

If the LED does not light up:

- Start engine and increase speed slowly.
  At
  1.2...1.6 bar
  the LED must go out, otherwise renew oil pressure switch.
- Increase engine speed further.
  At 2000 rpm and an oil temperature of 80 °C, the oil pressure should be between 2.7 ... 4.5 bar.

At higher engine speeds the oil pressure must not exceed
7.0 bar

If the specifications are not obtained:

- Rectify mechanical damage, e.g. bearing damage.
- Replace oil filter bracket with pressure relief valve => Page 90 , item 14 or replace oil pump.

If the specification is exceeded:

- Check oil galleries.
- If necessary, replace oil filter bracket with pressure relief valve

satelettronica

=> Page 90 , item 14

Protected by copyright. Copying for private or commercial purposes, in part or in whole, is not permitted unless authorised by Volkswagen AG. Volkswagen AG does not guarantee or accept any liability with respect to the correctness of information in this document. Copyright by Volkswagen AG.

satelettronica

# 19 - Cooling system

## 1 - Removing and installing parts of cooling system

### 1.1 - Removing and installing parts of cooling system

*Notes:*

- When the engine is warm the cooling system is under pressure. If necessary release pressure before commencing repair work.
- Hoses are secured with spring-type clips. In cases of repair only use spring-type clips.
- Assembly tool VAS 5024 or hose clip pliers V.A.G 1921 are recommended for fitting spring-type clips.
- When installing coolant hoses route stress-free, so that they do not come into contact with other components (observe markings on coolant connection and hose).

Perform cooling system leakage test with cooling system tester V.A.G 1274 and adapters V.A.G 1274/3 and V.A.G 1274/4.

Parts of cooling system body side =>Page 98 .

Parts of cooling system engine side => 101 .

Coolant hose connection diagram =>Page 111 .

Draining and filling with coolant=> Page 114 .

Coolant mixture ratios => Page 114 , draining and filling with coolant

Protected by copyright. Copying for private or commercial purposes, in part or in whole, is not permitted unless authorised by Volkswagen AG. Volkswagen AG does not guarantee or accept any liability with respect to the correctness of information in this document. Copyright by Volkswagen AG.
satelettronica

## 1.2 - Parts of cooling system body side

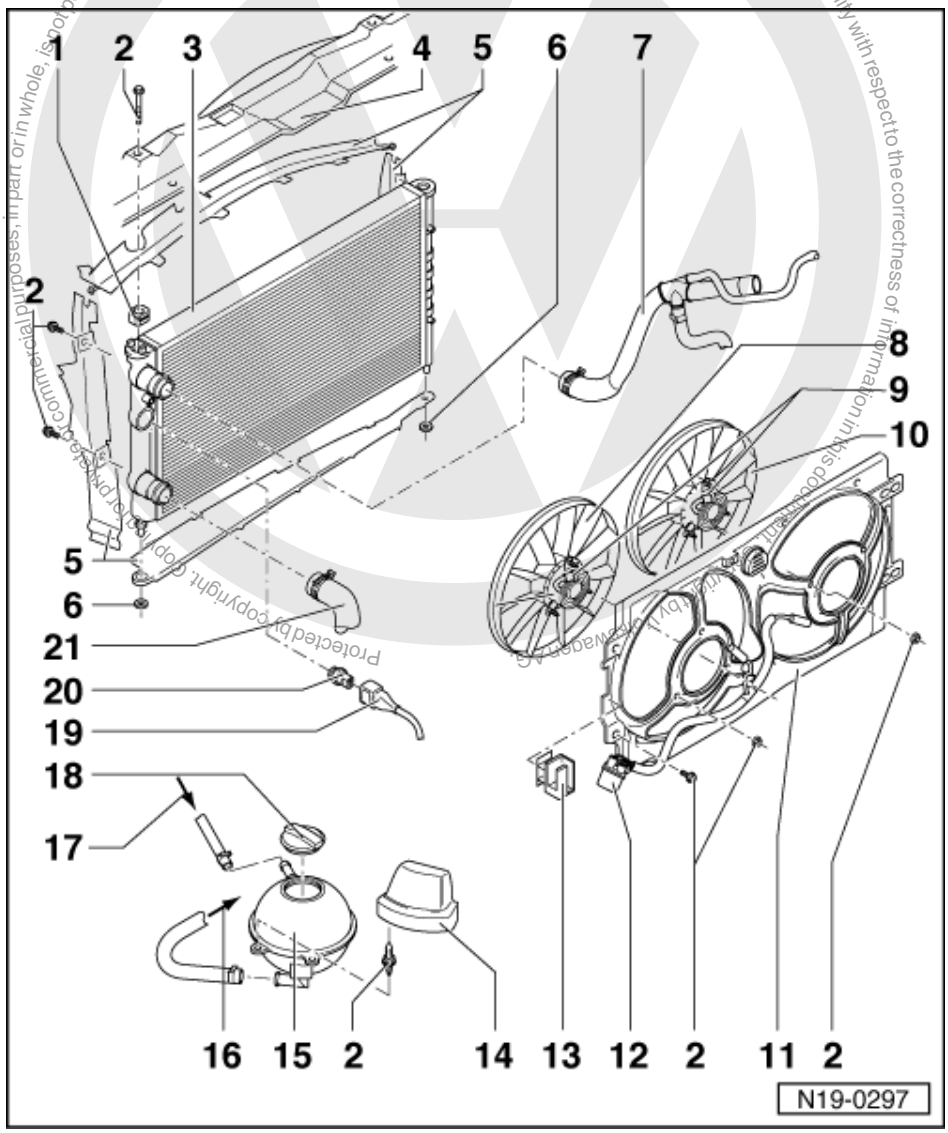


1 Clamp
2 10 Nm
3 Radiator
- Removing and installing =>Page 117
- After replacing renew entire coolant

4 Lock carrier
5 Air ducting
6 Rubber washer
7 Upper coolant hose
- Coolant hose connection diagram =>Page 111

8 Radiator fan
- Removing and installing =>Page 117

Protected by copyright. Copyright by Volkswagen AG. Volkswagen AG does not guarantee or accept any liability with respect to the correctness of information in this document. Copyright by Volkswagen AG. Reproduction, in part or in whole, is not permitted unless authorised by Volkswagen AG. Volkswagen AG does not guarantee or accept any liability with respect to the correctness of information in this document. Copyright by Volkswagen AG.
satelettronica

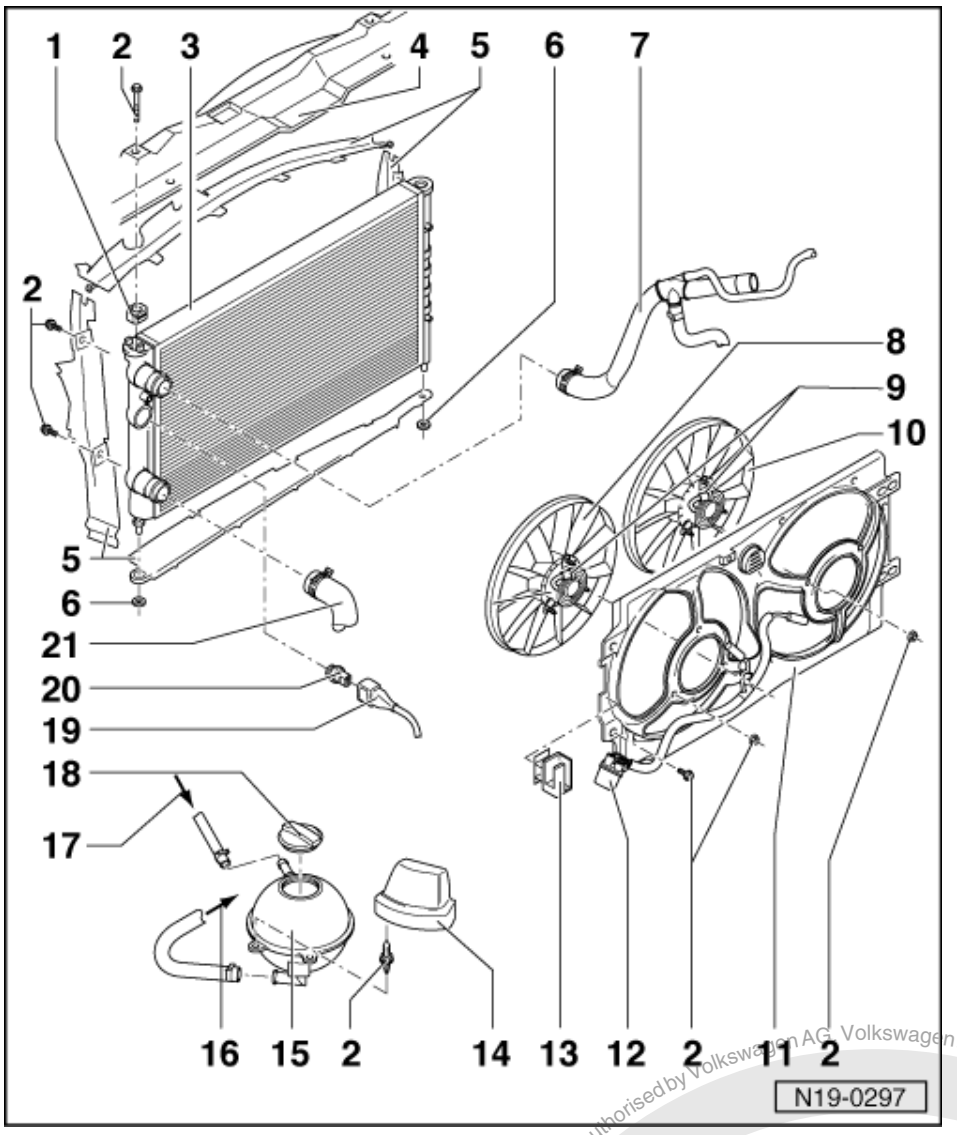


9 Connector
10 Additional fan
- Only vehicles with optional equipment

11 Fan ring
12 Connector
- For radiator fan

13 Bracket
- For radiator fan connector

14 Cover
15 Expansion tank
- Carry out leak test of cooling system with cooling system tester V.A.G 1274 and adapter V.A.G1274/3

16 To coolant pipe
- Coolant hose connection diagram =>Page 111

satelettronica
Protected by copyright. Copying for private or commercial purposes, in part or in whole, is not permitted unless authorised by Volkswagen AG. Volkswagen AG does not guarantee or accept any liability with respect to the correctness of information in this document. Copyright by Volkswagen AG.

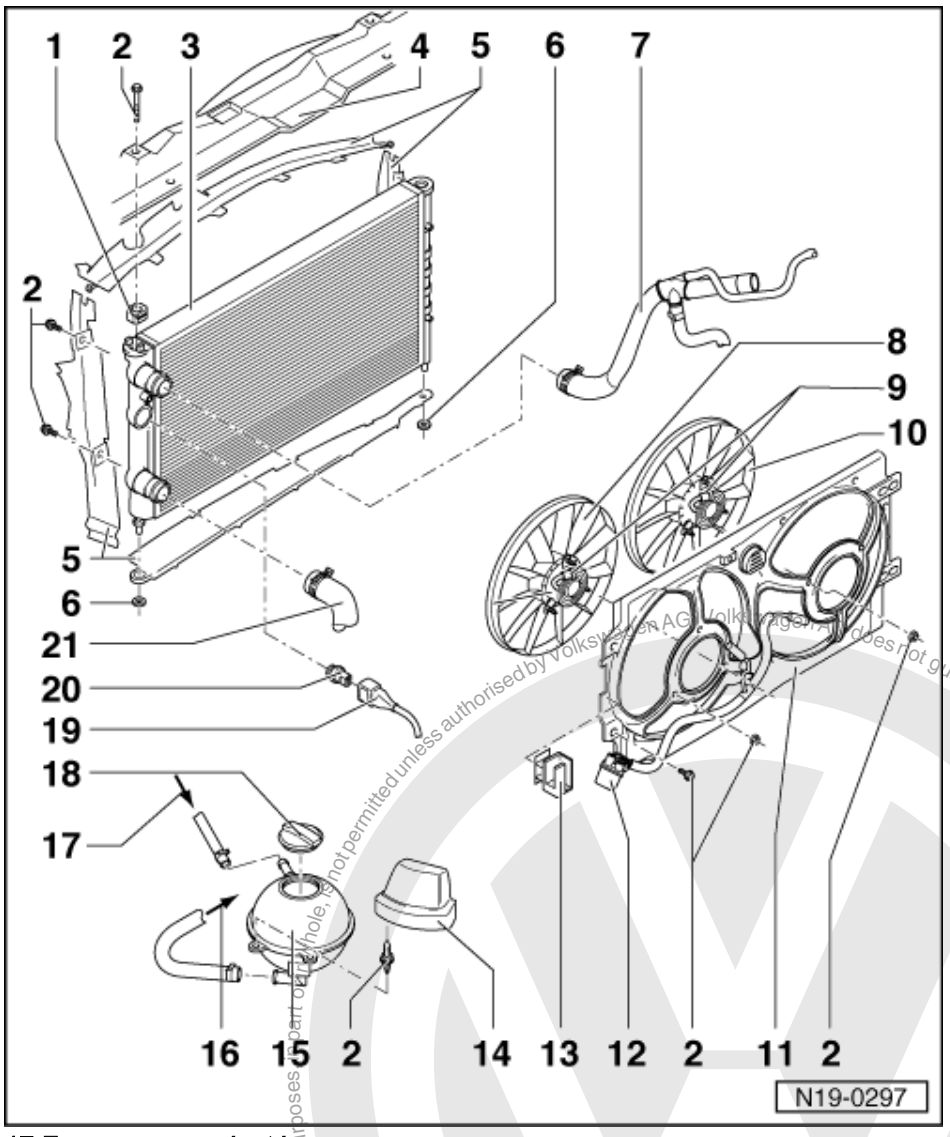


17 From upper coolant hose

- Coolant hose connection diagram =>Page 111

18 Cap

- Check with cooling system tester V.A.G 1274 and adapter V.A.G 1274/4
- Test pressure 1.4...1.6 bar

19 Connector

- For thermo-switch

20 Thermo-switch (F18), 35 Nm

- For electric fan
- Switching temperatures:
  Stage 1
  on: 92...97 °C
  off: 84...91 °C
  Stage 2
  on: 99...105 °C
  off: 91...98 °C

21 Lower coolant hose

- Coolant hose connection diagram =>Page 111

Protected by copyright. Copying for private and commercial purposes, in part or in whole, is not permitted unless authorised by Volkswagen AG. Volkswagen AG does not guarantee or accept any liability with respect to the correctness of information in this document. Copyright by Volkswagen AG.
satelettronica

## 1.3 - Parts of cooling system engine side

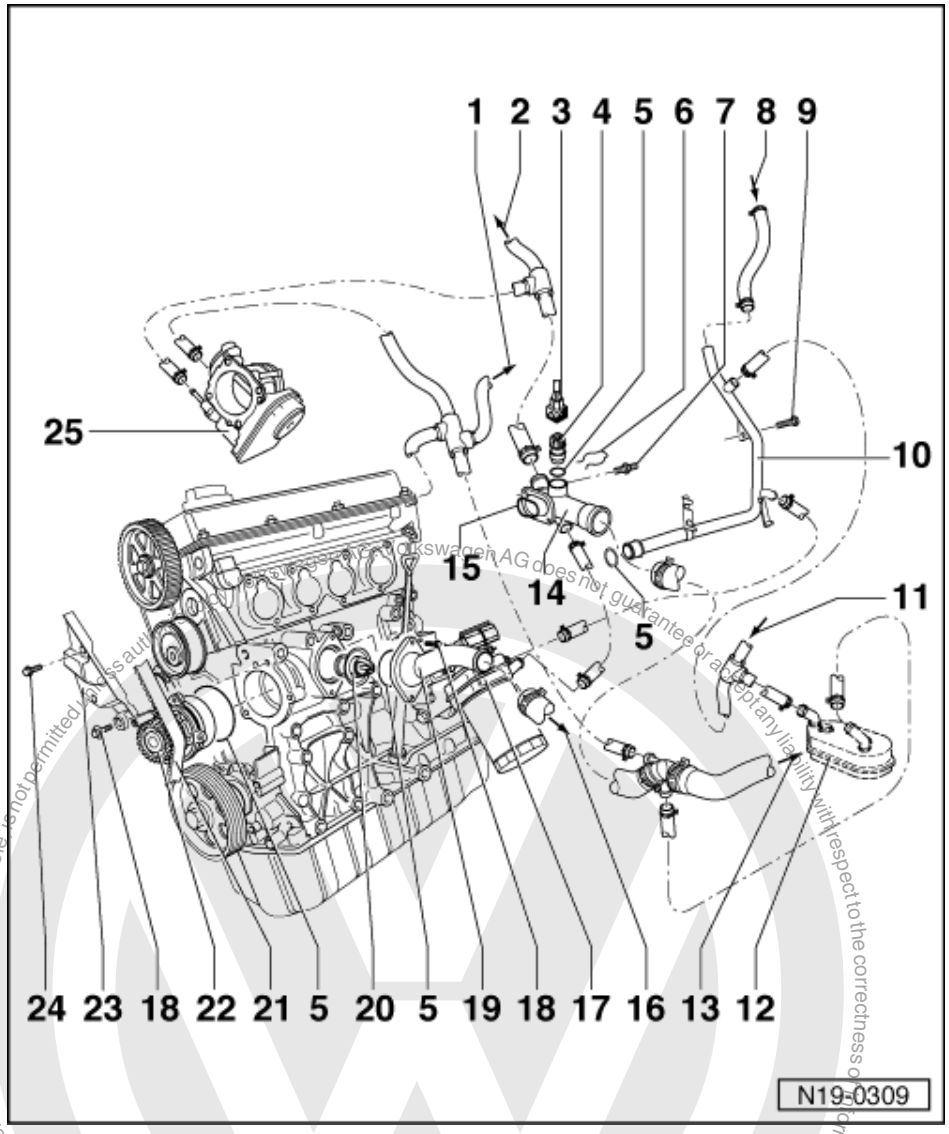


Engine codes: AEH, AKL

Engine codes: APF, AUR
=>Page 106

1 To top of expansion tank
- Coolant hose connection diagram =>Page 111

2 To heat exchanger
- Coolant hose connection diagram =>Page 111

3 Connector
- 4-pin

4 Coolant temperature sender (G62)
- For engine control unit
- If necessary release pressure in cooling system before removing
- Checking:

=> Repair Group 01; Fault memory; Interrogating and erasing engine control unit fault memory Fault memory Interrogating and erasing engine control unit fault memory

satelettronica

- With coolant temperature gauge sender (G2)

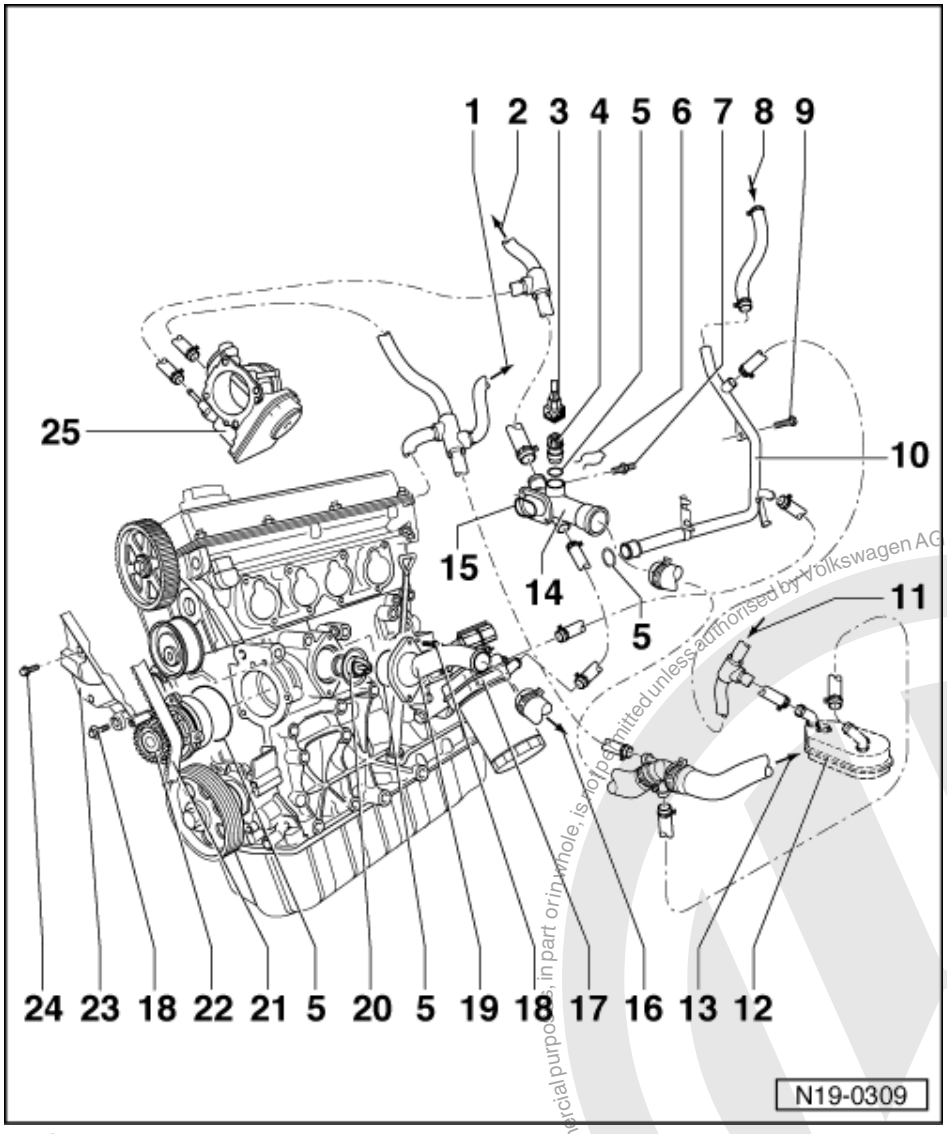


5 O-ring
- Renew

6 Retaining clip
- Check seated securely

7 10 Nm

8 From heat exchanger
- Coolant hose connection diagram =>Page 111

9 40 Nm

10 Coolant pipe
- Coolant hose connection diagram =>Page 111

11 From bottom of expansion tank
- Coolant hose connection diagram =>Page 111

12 ATF cooler
- Only on vehicles with automatic gearbox
- Coolant hose connection diagram =>Page 111

Protected by copyright. Copying for private or commercial purposes, in part or in whole, is not permitted unless authorised by Volkswagen AG. Volkswagen AG does not guarantee or accept any liability with respect to the correctness of information in this document. Copyright by Volkswagen AG.
satelettronica

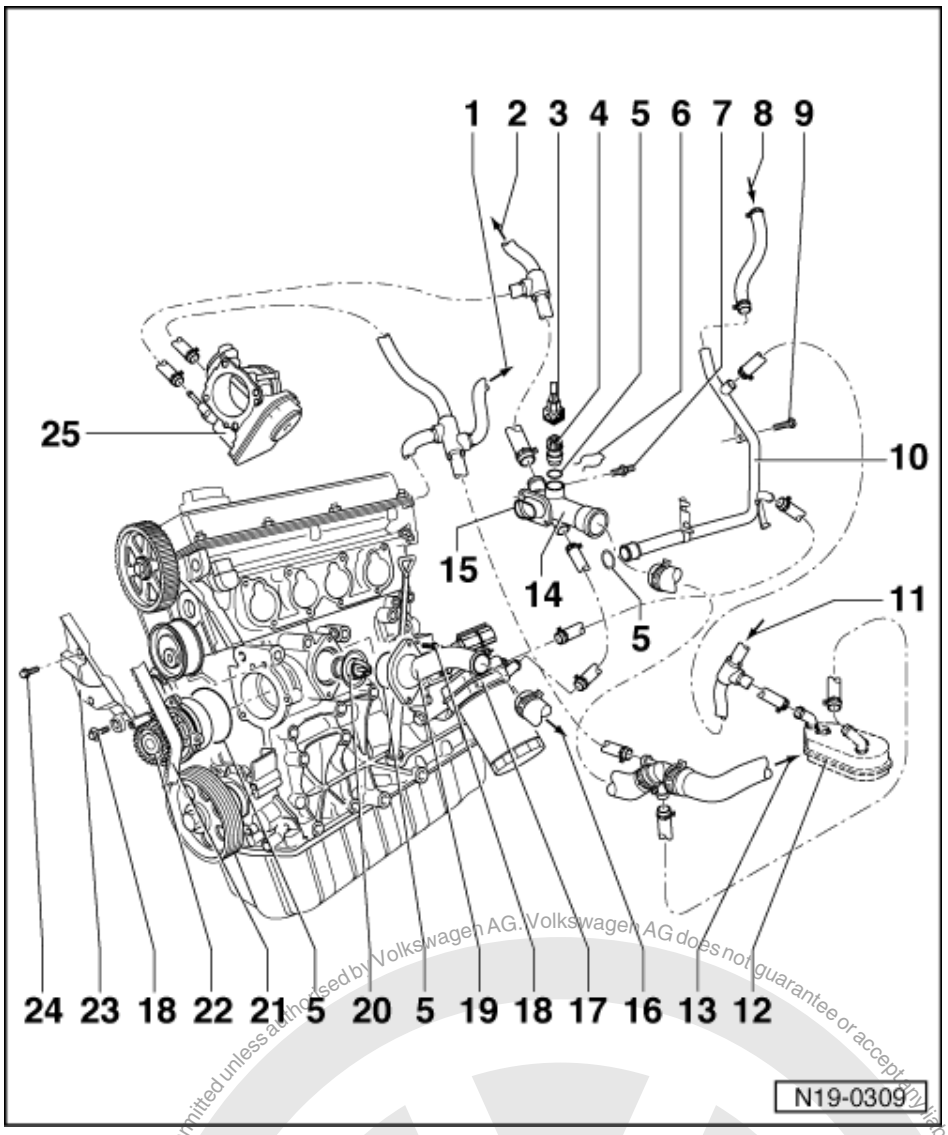


13 To top of radiator
- Coolant hose connection diagram =>Page 111

14 Connection

15 O-ring
- Renew

16 To bottom of radiator
- Coolant hose connection diagram =>Page 111

17 Oil cooler
- Removing and installing =>Page 91 , Item 17

18 15 Nm

19 Connection
- For thermostat

Protected by copyright. Copying for private or commercial purposes, in part or in whole, is not permitted unless authorised by Volkswagen AG. Volkswagen AG does not guarantee or accept any liability with respect to the correctness of information in this document. Copyright by Volkswagen AG.
satelettronica

Protected by copyright. Copying for private or commercial purposes, in part or in whole, is not permitted unless authorised by Volkswagen AG. Volkswagen AG does not guarantee or accept any liability with respect to the correctness of information in this document. Copyright by Volkswagen AG.

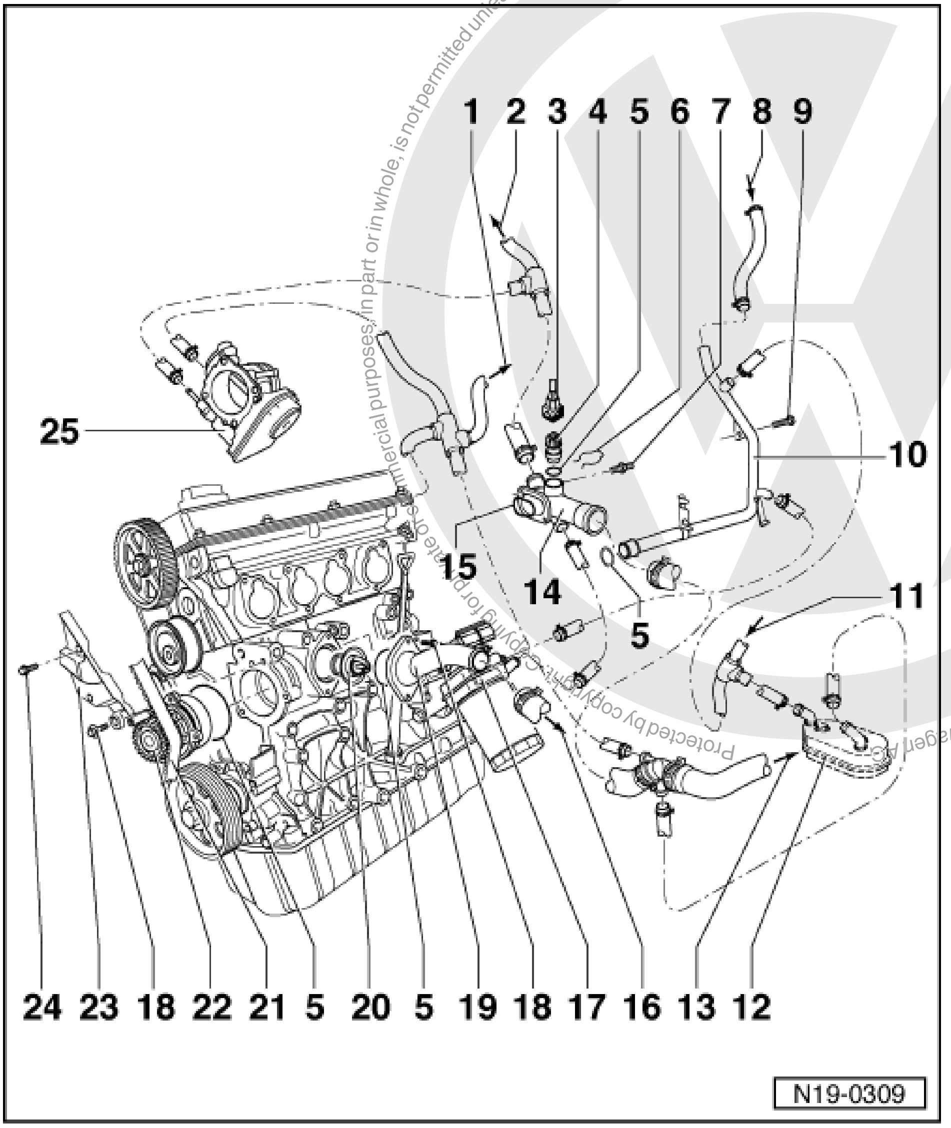


20 Coolant thermostat

- Removing and installing => Page 121
- Observe installation position, => Page 121 Removing and installing thermostat
- Checking: heat-up thermostat in water
- Opening commences approx. 85 °C
- Ends approx. 105 °C
- Opening lift min. 7 mm

21 Toothed belt

- Mark D.O.R. before removing
- Check for wear
- Do not kink
- Removing, installing and tensioning => Page 55

22 Coolant pump

- Check for ease of movement
- If damaged or leaking renew complete
- Removing and installing => Page 119

satelettronica

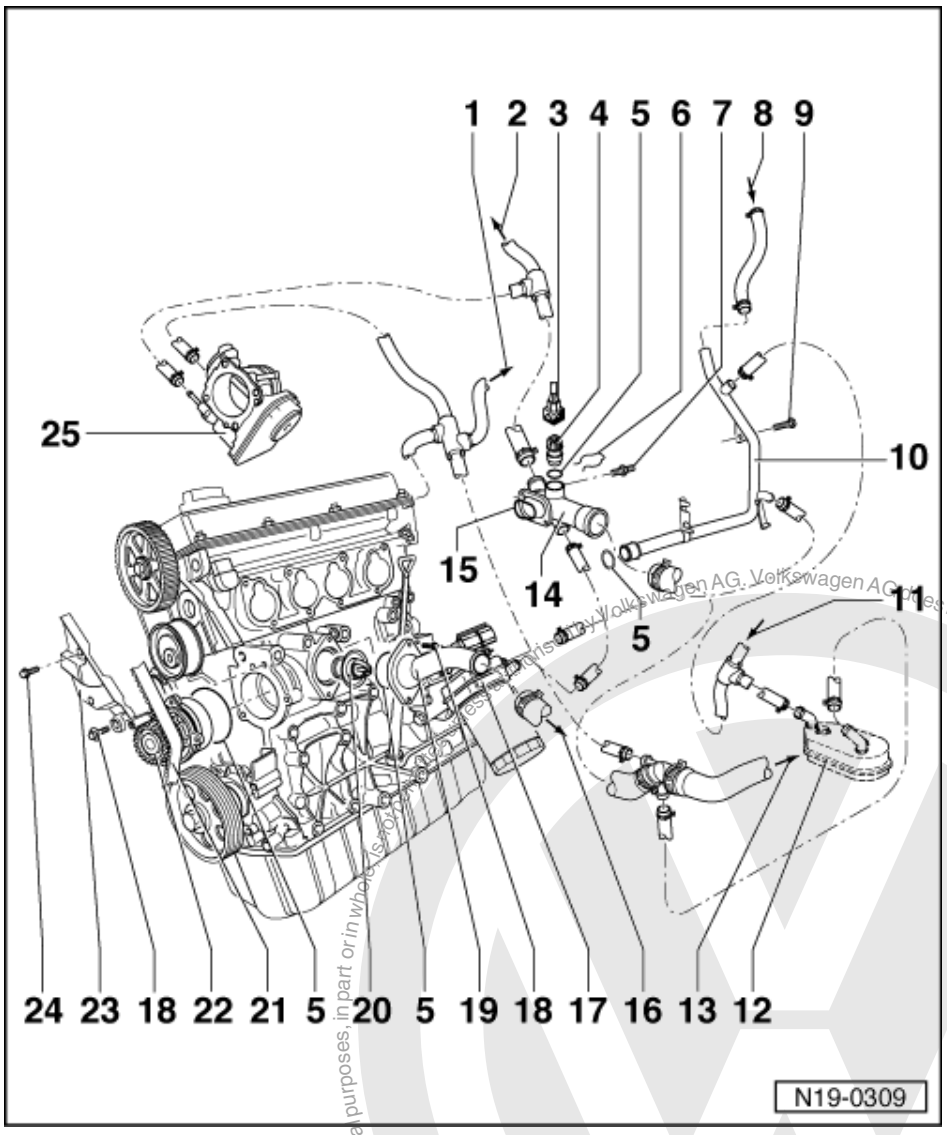


23 Rear toothed belt guard
24 20 Nm
25 Throttle valve control part
- Heated by coolant

Protected by copyright. Copying for private or commercial purposes, in part or in whole is not permitted unless authorised by Volkswagen AG. Volkswagen AG does not guarantee or accept any liability with respect to the correctness of information in this document. Copyright by Volkswagen AG.
satelettronica

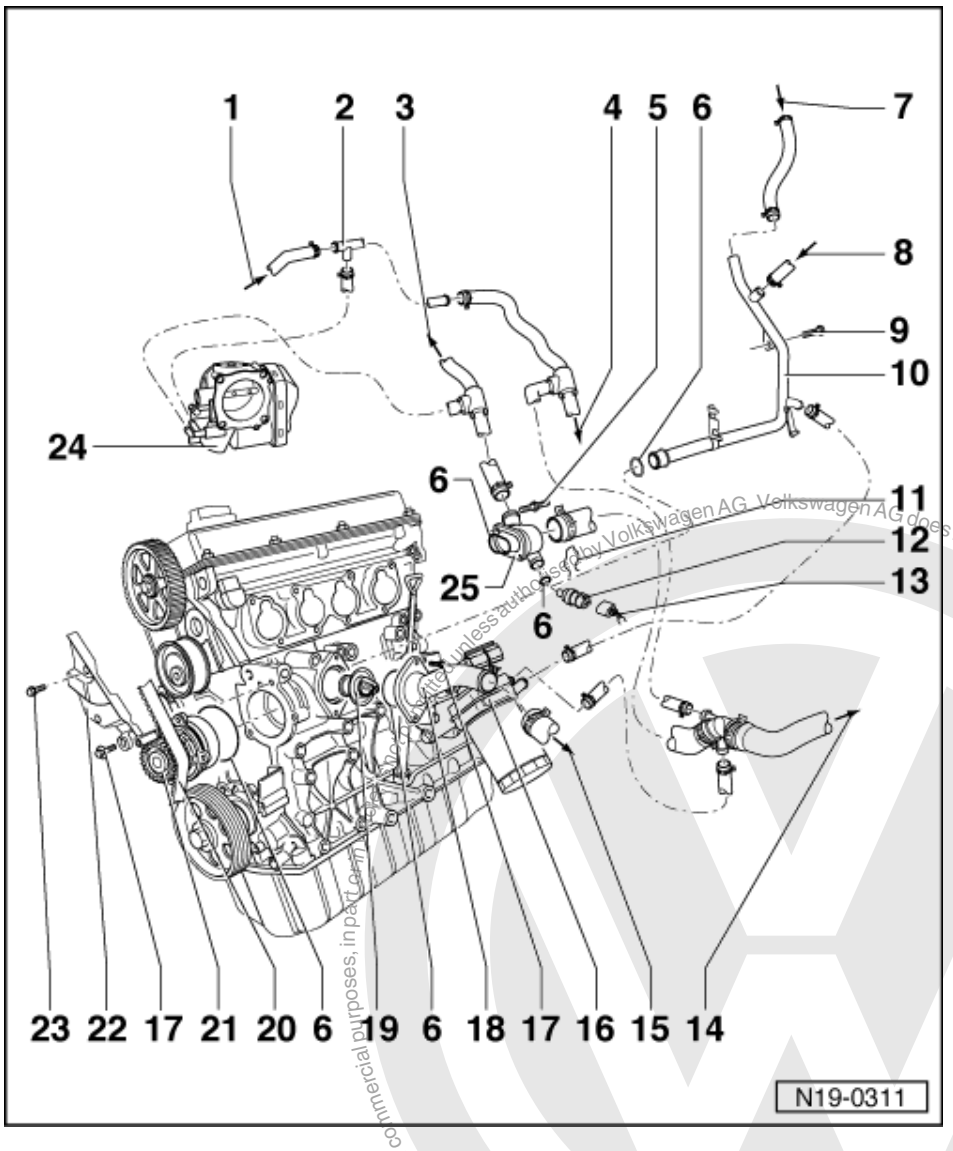


Engine codes: APF, AUR

1 From cylinder head breather pipe
2 Coolant pipe
- Clipped to bulkhead

3 To heat exchanger
- Coolant hose connection diagram =>Page 111

4 To top of expansion tank
- Coolant hose connection diagram =>Page 111

5 10 Nm
6 O-ring
- Renew

7 From heat exchanger
- Coolant hose connection diagram =>Page 111

Protected by copyright. Copying for private or commercial purposes, in part or in whole, is not permitted unless authorised by Volkswagen AG. Volkswagen AG does not guarantee or accept any liability with respect to the correctness of information in this document. Copyright by Volkswagen AG.
satelettronica

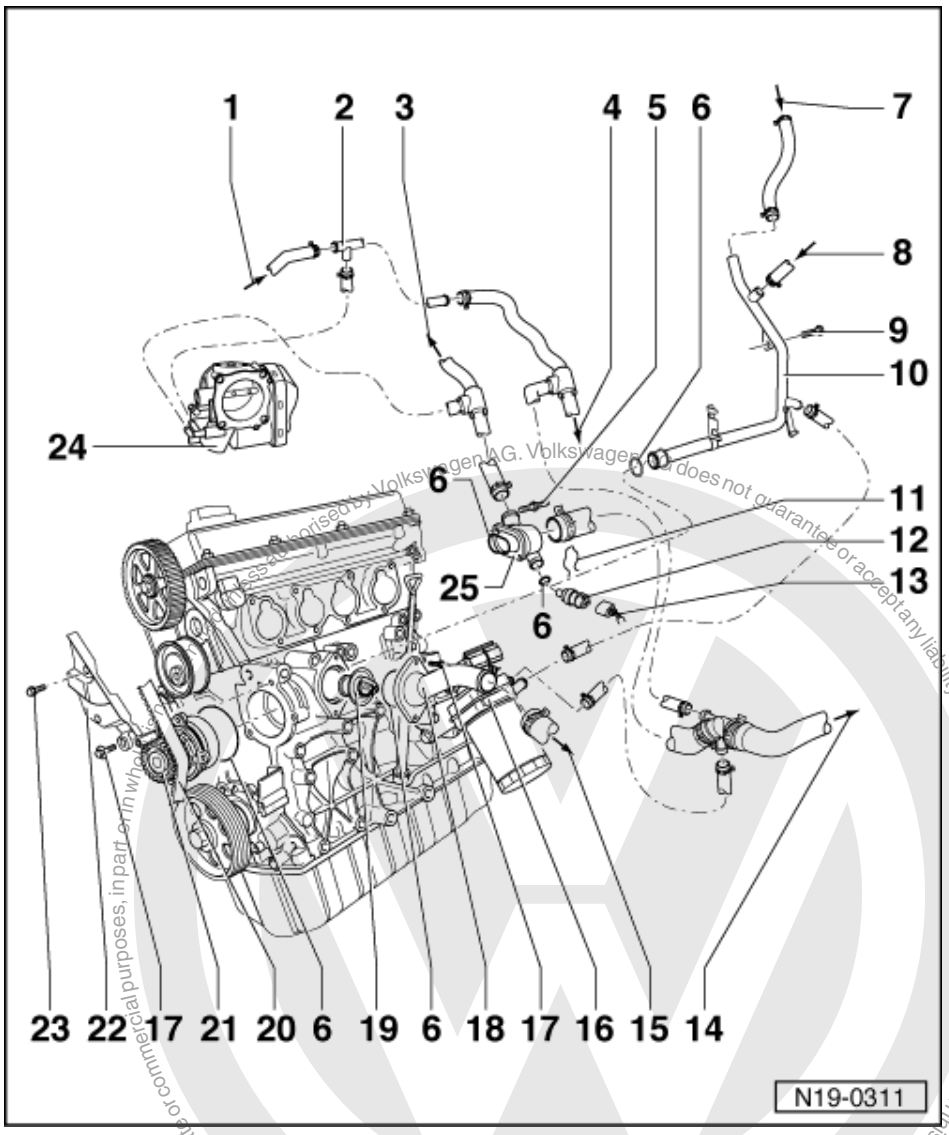


8 From bottom of expansion tank
- Coolant hose connection diagram =>Page 111

9 40 Nm

10 Coolant pipe
- Coolant hose connection diagram =>Page 111

11 Retaining clip
- Check seated securely

12 Coolant temperature sender (G62)
- For engine control unit
- If necessary release pressure in cooling system before removing
- Checking:

=> Repair Group 01; Fault memory; Interrogating and erasing engine control unit fault memory Fault memory Interrogating and erasing engine control unit fault memory

- With coolant temperature gauge sender (G2)

Protected by copyright. Copyright by Volkswagen AG.
Copyright by Volkswagen AG. Volkswagen AG does not guarantee or accept any liability with respect to the correctness of information in this document.
Reproduction authorised only for commercial purposes, in part or in whole, only with the express consent of Volkswagen AG.
satelettronica

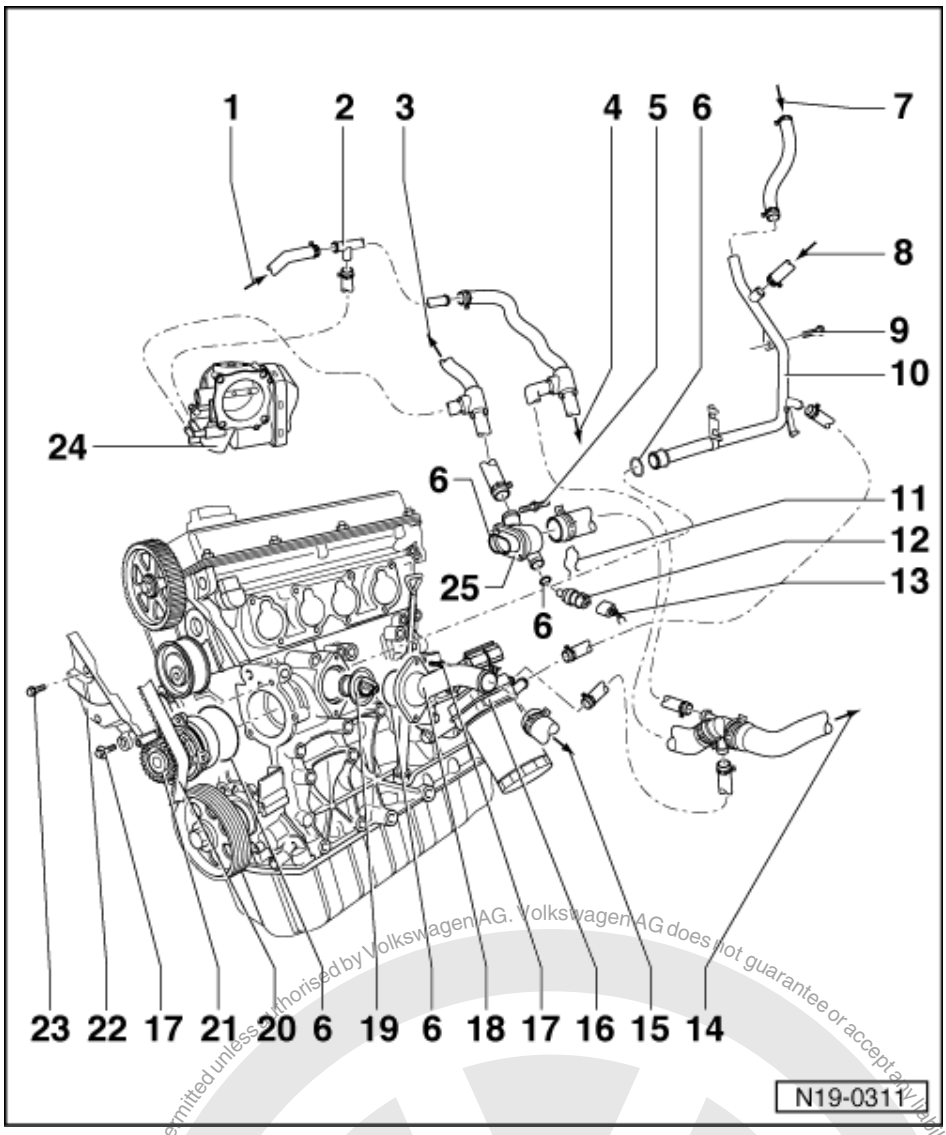


13 Connector
- 4-pin

14 To top of radiator
- Coolant hose connection diagram =>Page 111

15 To bottom of radiator
- Coolant hose connection diagram =>Page 111

16 Oil cooler
- Removing and installing =>Page 91 , Item 17

17 15 Nm

18 Connection
- For thermostat

Protected by copyright. Copying for private or commercial purposes, in part or in whole, is not permitted unless authorised by Volkswagen AG. Volkswagen AG does not guarantee or accept any liability with respect to the correctness of information in this document. Copyright by Volkswagen AG.

satelettronica

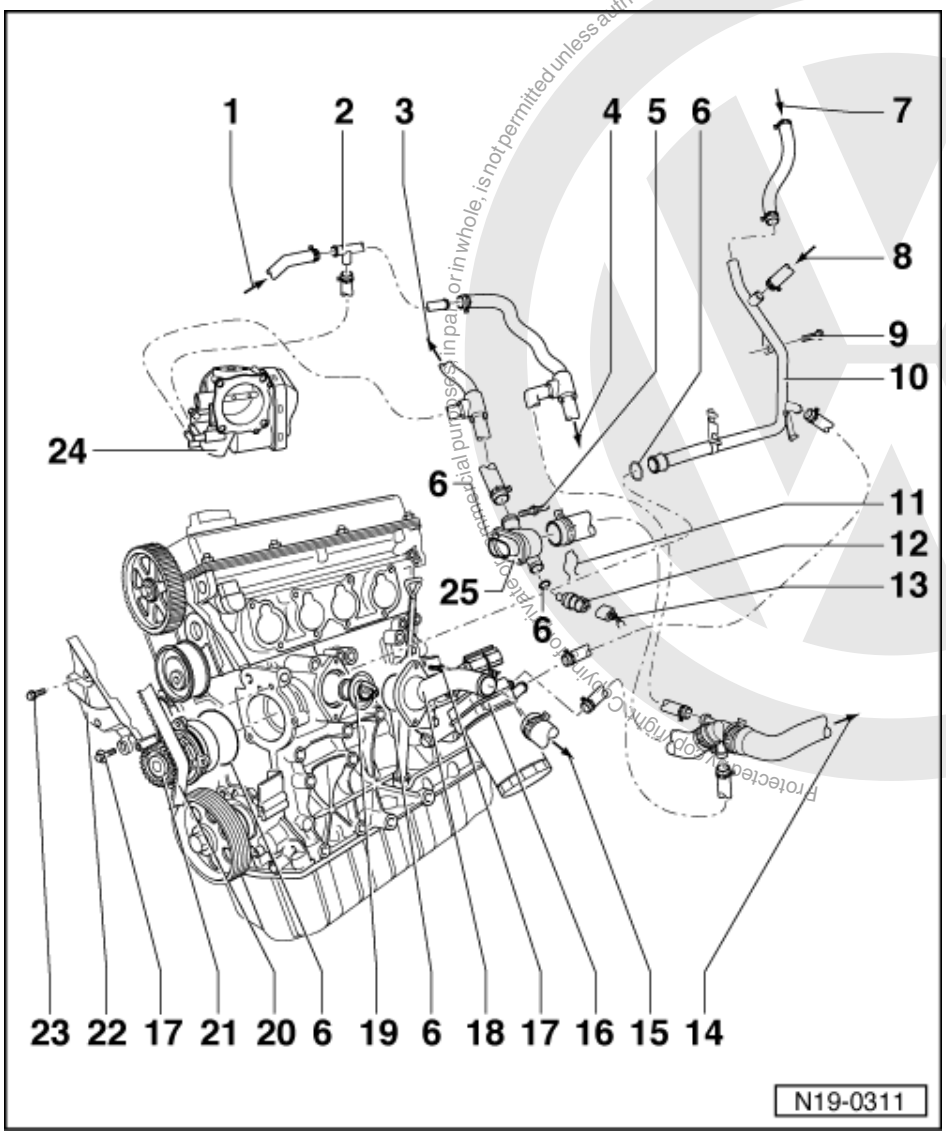


19 Coolant thermostat

- Removing and installing
  => Page 121
- Observe installation position,
  => Page 121 Removing and installing thermostat
- Checking: heat-up thermostat in water
- Opening commences approx. 85 °C
- Ends approx. 105 °C
- Opening lift min. 7 mm

20 Toothed belt

- Mark D.O.R. before removing
- Check for wear
- Do not kink
- Removing, installing and tensioning
  => Page 55

Protected by copyright. Copyright by Volkswagen AG. Volkswagen AG does not guarantee or accept any liability with respect to the correctness of information in this document. Copyright by Volkswagen AG. Reproduction, in whole or in part, is not permitted unless authorised by Volkswagen AG. Volkswagen AG does not guarantee or accept any liability with respect to the correctness of information in this document. Copyright by Volkswagen AG.
satelettronica

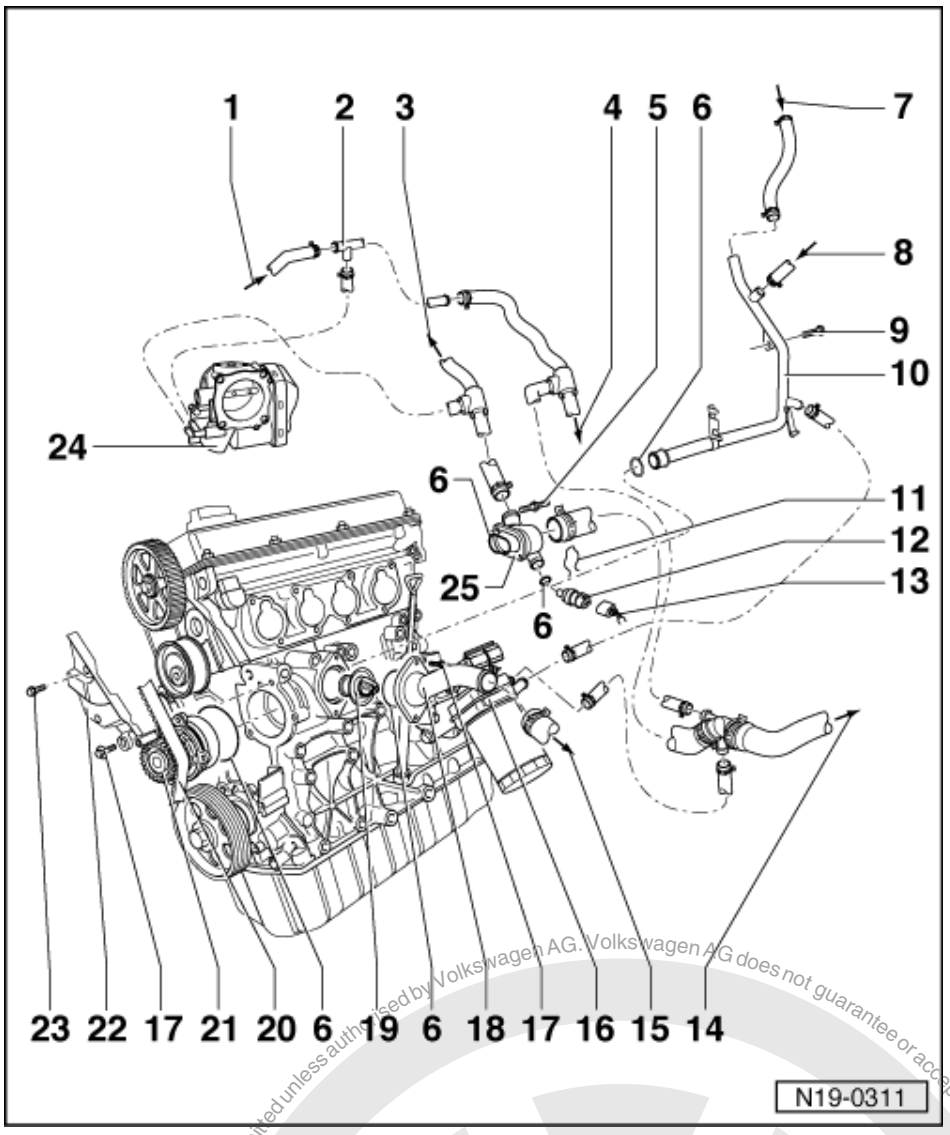


21 Coolant pump
- Check for ease of movement
- If damaged or leaking renew complete
- Removing and installing
  => Page 119

22 Rear toothed belt guard

23 20 Nm

24 Throttle valve control part
- Heated by coolant

25 Connection

Protected by copyright. Copyright by Volkswagen AG.
Copyright for private or commercial purposes in part or whole is not permitted unless authorised by Volkswagen AG. Volkswagen AG does not guarantee or accept any liability with respect to the correctness of information in this document.
satelettronica

## 1.4 - Coolant hose connection diagram

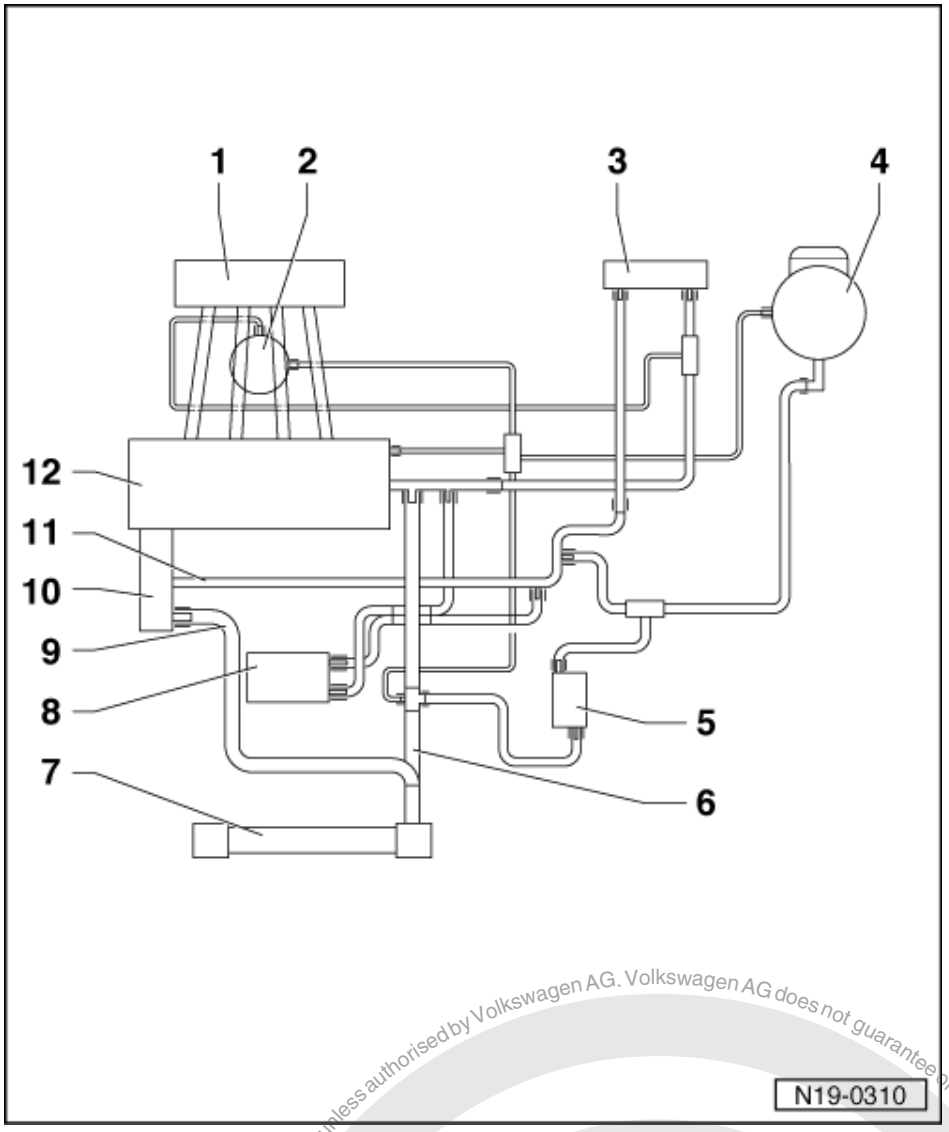


Engine codes: AEH, AKL

Engine codes: APF, AUR
=> page 113

1 Intake manifold
2 Throttle valve control part
3 Heating system heat exchanger
4 Expansion tank
5 ATF cooler
- Only on vehicles with automatic gearbox

6 Upper coolant hose
7 Radiator
8 Oil cooler
9 Lower coolant hose

Protected by copyright. Copying for private or commercial purposes, in part or in whole, is not permitted unless authorised by Volkswagen AG. Volkswagen AG does not guarantee or accept any liability with respect to the correctness of information in this document. Copyright by Volkswagen AG.
satelettronica

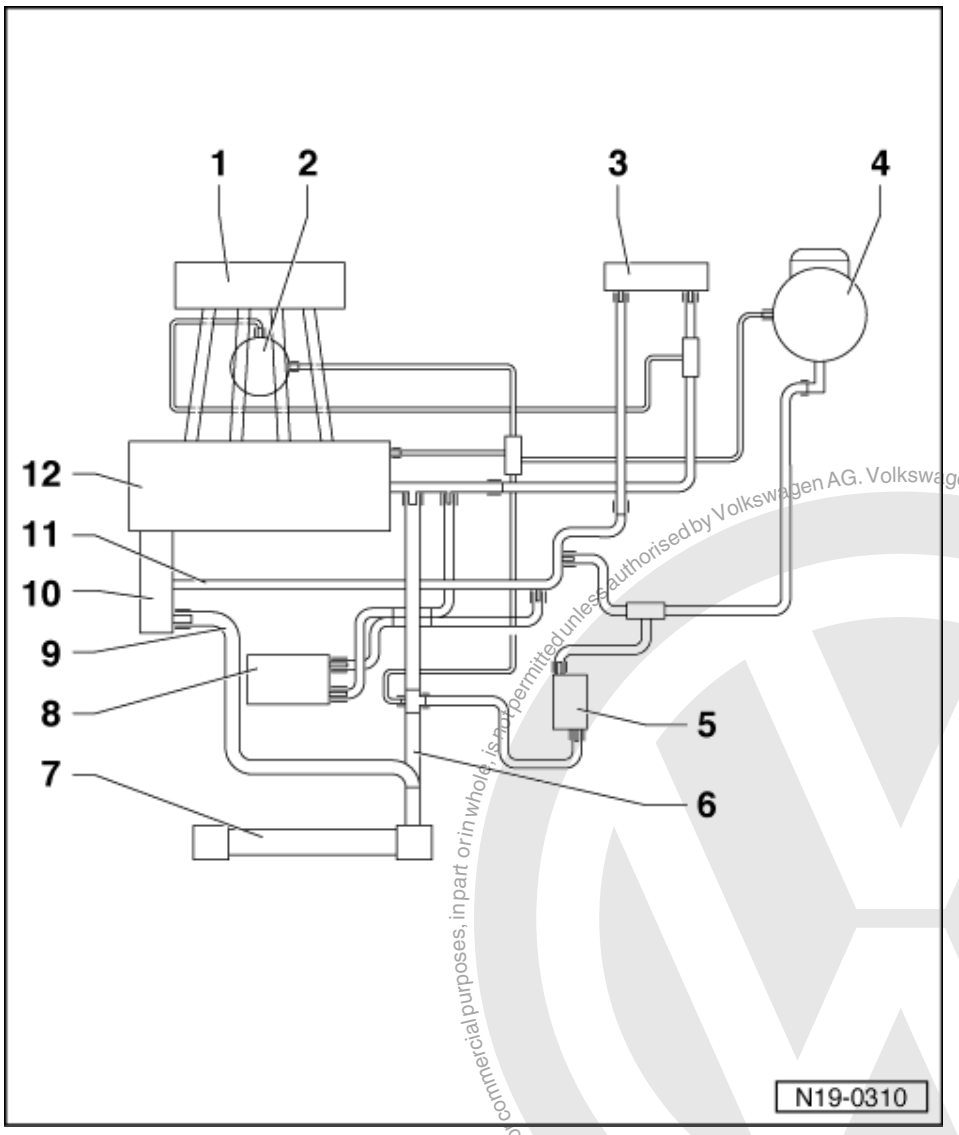


10 Coolant pump/coolant thermostat
11 Coolant pipe
12 Cylinder head/cylinder block

Protected by copyright. Copying for private or commercial purposes, in part or in whole, is not permitted unless authorised by Volkswagen AG. Volkswagen AG does not guarantee or accept any liability with respect to the correctness of information in this document. Copyright by Volkswagen AG.
satelettronica

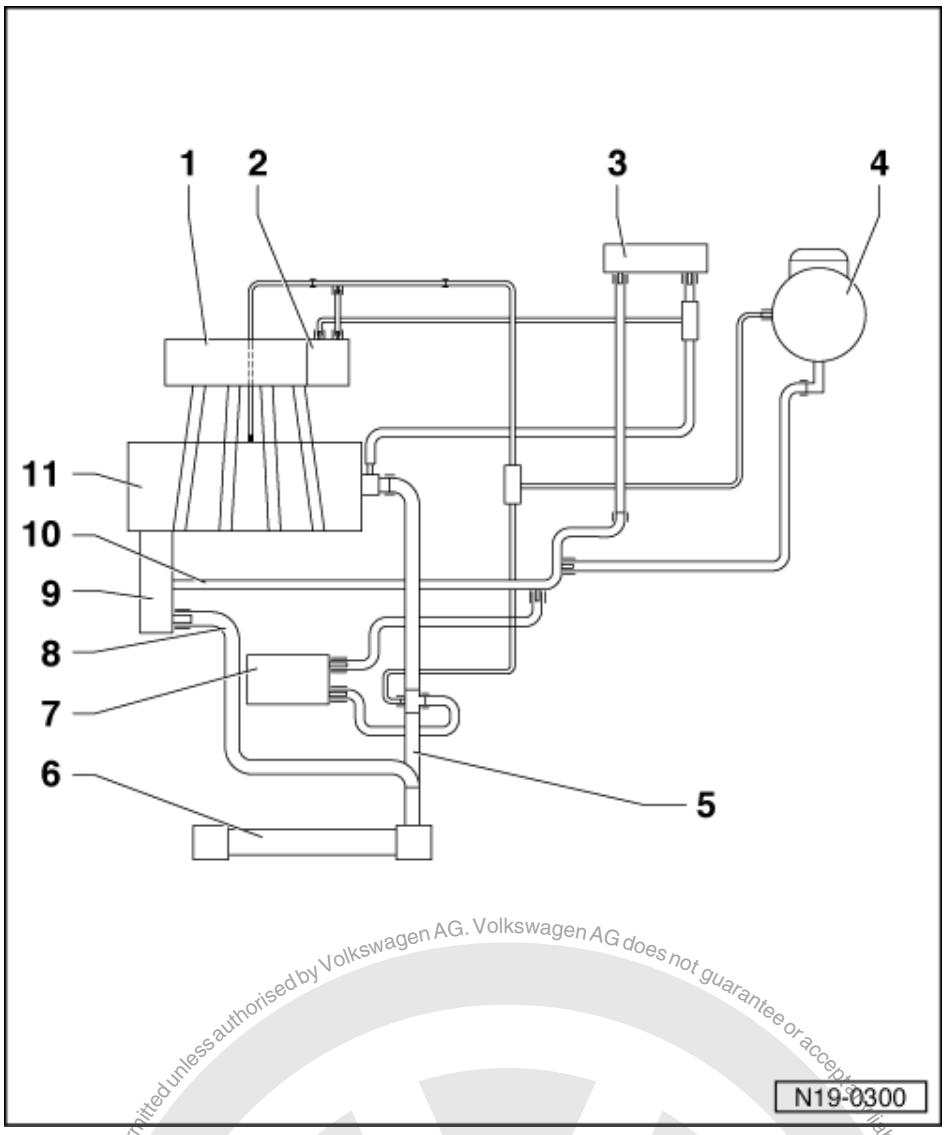


Engine codes: APF, AUR

1 Intake manifold
2 Throttle valve control part
3 Heating system heat exchanger
4 Expansion tank
5 Upper coolant hose
6 Radiator
7 Oil cooler
8 Lower coolant hose
9 Coolant pump/coolant thermostat
10 Coolant pipe
11 Cylinder head/cylinder block

Protected by copyright. Copying for private or commercial purposes, in any form or medium, is not permitted unless authorised by Volkswagen AG. Volkswagen AG does not guarantee or accept any liability with respect to the correctness of information in this document. Copyright by Volkswagen AG.

satelettronica

## 1.5 - Draining and filling cooling system

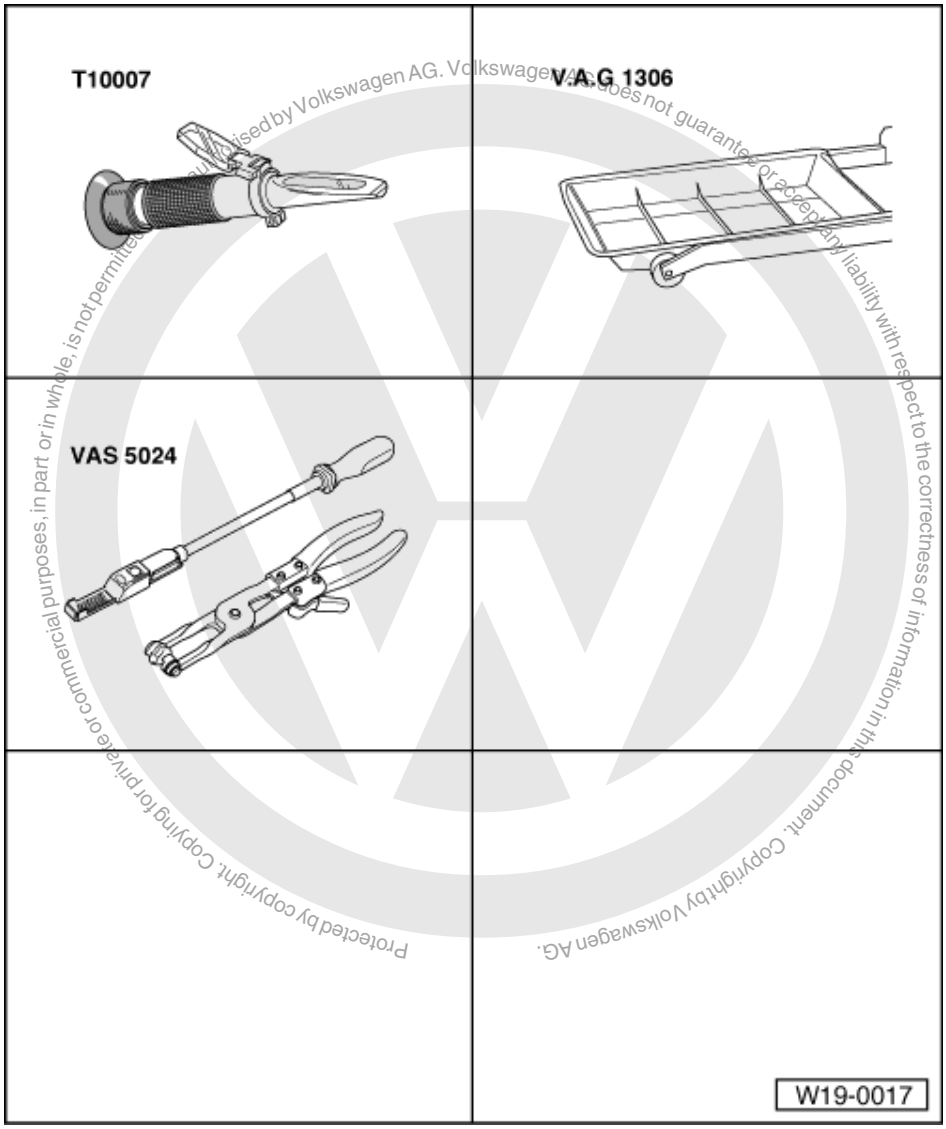


Protected by copyright. Copying for private or commercial purposes, in part or in whole, is not permitted unless authorised by Volkswagen AG. Volkswagen AG does not guarantee or accept any liability with respect to the correctness of information in this document. Copyright by Volkswagen AG.

satelettronica

**Special tools, workshop equipment, test and measuring appliances and auxiliary items required**

- T10007 Refractometer
- V.A.G 1306 Drip tray
- VAS 5024 Assembly tool for spring-type clamps

Not illustrated:

- VAS 6096 Cooling system charging

**Draining**

| |
|---|
| Warning !<br>Steam can be released when removing the cap from the expansion tank. Cover cap with a cloth and open carefully. |

- Open cap on coolant expansion tank.
- Remove noise insulation tray.

- Pull off lower coolant hose at radiator using assembly tool for spring-type clamps VAS 5024.

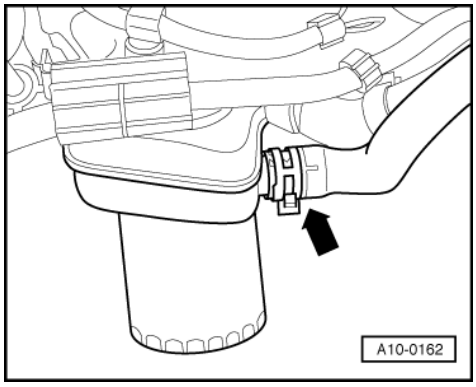


- -> To drain coolant from engine also remove coolant hose from oil cooler -arrow-.

*Note:*

*Observe disposal regulations!*

Filling

*Notes:*

- Only use coolant additive G 12 in accordance with TL VW 774 F.
  Distinguishing feature: coloured violet
- G 12 and coolant additives marked "In accordance with TL VW 774 F" prevent frost and corrosion damage, scaling and also raise boiling point of coolant. For this reason the system must be filled all year round with frost and corrosion protection additives.
- G 12 violet (in accordance with TL VW 774 F) can be mixed with the previous coolant additive G 12 red!
- Because of its high boiling point, the coolant improves engine reliability under heavy loads, particularly in countries with tropical climates.
- Protection against frost must be assured to about -25 °C (in arctic climatic countries to about -35 °C).
- The coolant concentration must not be reduced by adding water even in warmer seasons and in warmer countries. The anti-freeze ratio must be at least 40 %.
- If for climatic reasons a greater frost protection is required, the amount of G 12 can be increased, but only up to 60 % (frost protection to about -40 °C), as otherwise frost protection is reduced again and cooling effectiveness is also reduced.
- The refractometer T10007 is recommended for determining the current anti-freeze density.
- If radiator, heat exchanger, cylinder head or cylinder head gasket is replaced, do not reuse old coolant.

Recommended mixture ratios:

| Frost pro- tec- tion to | Anti-freeze amount | G 121) | Water1) |
|---|---|---|---|
| -25 °C | 40 % | 2.2 ltr. | 3.3 ltr. |
| -35 °C | 50 % | 2.75 ltr. | 2.75 ltr. |

1) The quantity of coolant can vary depending upon the vehicle equipment.

- Secure lower coolant hose on connecting piece of radiator.
- Connect the coolant hose to oil cooler.

With cooling system charging unit VAS 6096

- Screw adapter V.A.G 1274/3 onto expansion tank.
- Fill coolant circuit using cooling system charging unit VAS 6096.

=> Operating instructions for cooling system charging unit VAS 6096

Protected by copyright. Copying for private or commercial purposes, in part or in whole, is not permitted unless authorised by Volkswagen AG. Volkswagen AG does not guarantee or accept any liability with respect to the correctness of information in this document. Copyright by Volkswagen AG.
satelettronica

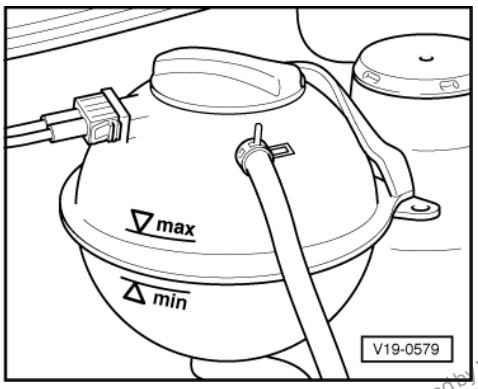


Not using cooling system charging unit VAS 6096

- -> Fill with coolant up to max. mark on expansion tank.

With and without cooling system charging unit VAS 6096

- Fit expansion tank cap.
- Turn off heater control.
- Start engine and maintain an engine speed of about 2000 rpm for approx. 3 minutes.
- Run engine until radiator fan cuts-in.

Warning !
Steam can be released when removing the cap from the expansion tank. Cover cap with a cloth and open carefully.

- Check coolant level and top-up if necessary. When the engine is at normal operating temperature, the coolant level must be on the MAX. marking and between the MIN. and MAX. marking when the engine is cold.
- Install noise insulation tray.

Protected by copyright. Copying for private or commercial purposes, in part or in whole, is not permitted unless authorised by Volkswagen AG. Volkswagen AG does not guarantee or accept any liability with respect to the correctness of information in this document. Copyright by Volkswagen AG.
satelettronica

## 1.6 - Removing and installing radiator

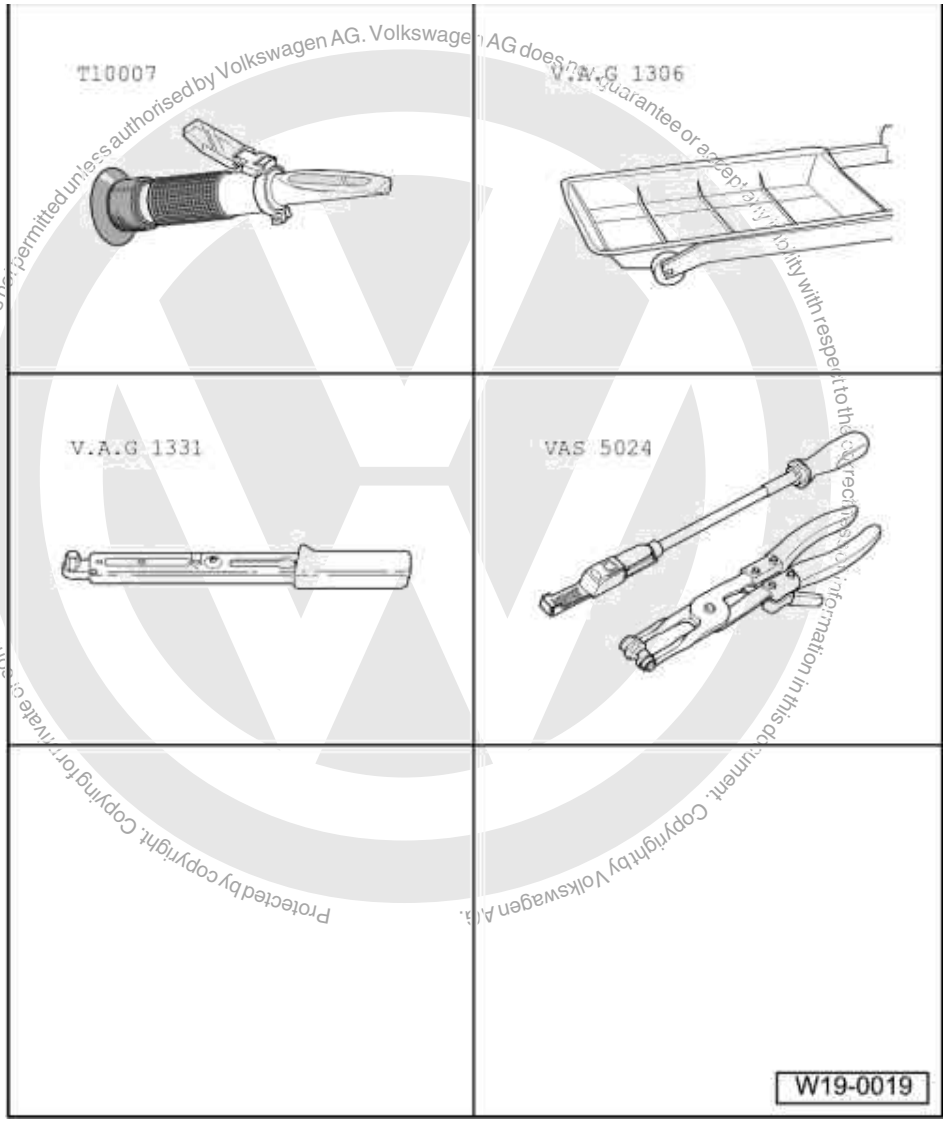


Protected by copyright. Copying for private or commercial purposes, in part or in whole, is not permitted unless authorised by Volkswagen AG. Volkswagen AG does not guarantee or accept any liability with respect to the correctness of information in this document. Copyright by Volkswagen A.G.

satelettronica

**Special tools, workshop equipment, test and measuring appliances and auxiliary items required**

- T10007 Refractometer
- V.A.G 1306 Drip tray
- V.A.G 1331 Torque wrench (5...50 Nm)
- VAS 5024 Assembly tool for spring-type clips

**Removing**

- Drain coolant => Page 114 .
- Pull coolant hoses off radiator.
- Pull connectors off thermo-switch and radiator fan.
- Remove radiator fan together with fan ring.

*Vehicles with air conditioning system:*

- Observe additional information and removal work => Page 118 .

- Remove radiator securing bolts and take out radiator.

**Installing**

Installation is carried out in the reverse order, when doing this note the following:

- Filling with coolant => Page 114
- Electrical connections and routing:

=> Current flow diagrams, Electrical fault finding and Fitting locations

**Additional information and removal work on vehicles with air conditioner**

| |
|---|
| Warning!<br>The air conditioning system refrigerant circuit must not be opened. |

***Note:***

*To prevent damage to condenser and also to the refrigerant lines/hoses, ensure that the pipes and hoses are not stretched, kinked or bent.*

- Remove retaining clamp(s) from refrigerant pipes.
- Removing lock carrier with attachments:

=> General body repairs; Repair group 50; Body, front; Removing and installing lock carrier with attachments.
Body, front Removing and installing lock carrier with attachments.

- Remove radiator securing bolts.
- Remove condenser from cooler.
- Remove air conditioner compressor and position to one side with lock carrier so that the refrigerant hoses are not stressed.
- Check headlight adjustment and adjust if necessary:

=> Maintenance

Copyright by Volkswagen AG. Volkswagen AG does not guarantee or accept any liability with respect to the correctness of information in this document. Copying for private or commercial purposes, in part or in whole, is not permitted unless authorised by Volkswagen AG.
Protected by copyright.
satelettronica

## 1.7 - Removing and installing coolant pump

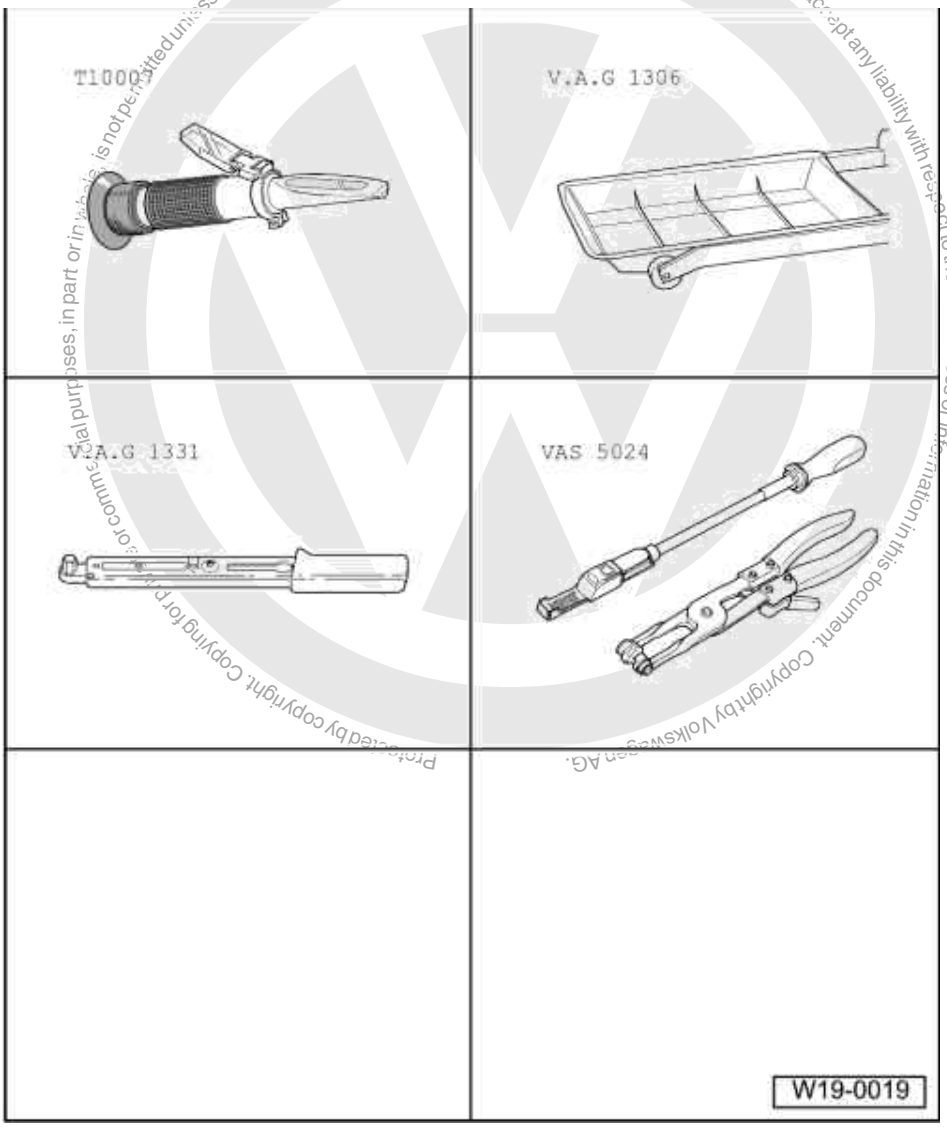


### Special tools, workshop equipment, test and measuring appliances and auxiliary items required

- T10007 Refractometer
- V.A.G 1306 Drip tray
- V.A.G 1331 Torque wrench (5...50 Nm)
- VAS 5024 Assembly tool for spring-type clips

### Removing

*Notes:*

- Always renew seals and gaskets.
- The lower part of the toothed belt guard need not be removed.
- The toothed belt should be left in position on the crankshaft sprocket.
- Cover toothed belt with a cloth to protect it from coolant before removing coolant pump.

- Drain coolant => Page 114
- Remove windscreen washer reservoir.
- Remove ribbed belt => Page 26 .
- Remove tensioning element for ribbed belt.
- Remove upper and centre toothed belt guard.

satelettronica

- Take toothed belt off coolant pump toothed belt sprocket => Page 55 , Removing, installing and tensioning toothed belt.

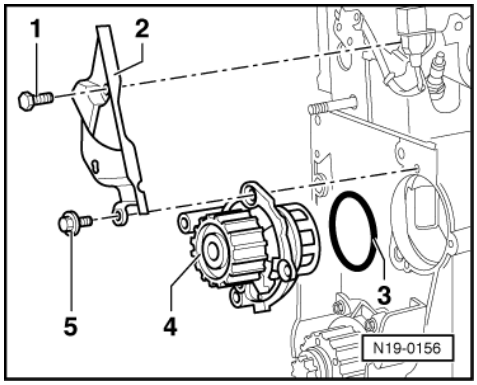


- -> Remove securing bolt -1- from rear toothed belt guard -2-.
- Unscrew coolant pump securing bolts -5- and remove coolant pump -4-.

**Installing**

Installation is carried out in the reverse sequence, when doing this note the following:

- Moisten new O ring -3- with coolant.
- Insert coolant pump -4- into cylinder block and tighten securing bolts -5-.
  Tightening torque: 15 Nm

***Note:***

*The coolant pump plug faces downwards.*

- Tighten securing bolt -1- for rear toothed belt guard -2- to cylinder head.
  Tightening torque: 20 Nm

Installing toothed belt and adjusting valve timing => Page 55 .

- Install upper and centre toothed belt guard.
- Install ribbed belt tensioning element.
  Tightening torque: 25 Nm
- Install ribbed belt => Page 26 .
- Remove windscreen washer system reservoir.
- Fill with coolant => Page 114

Protected by copyright. Copying for private or commercial purposes, in part or in whole, is not permitted unless authorised by Volkswagen AG. Volkswagen AG does not guarantee or accept any liability with respect to the correctness of information in this document. Copyright by Volkswagen AG.
satelettronica

## 1.8 - Removing and installing thermostat

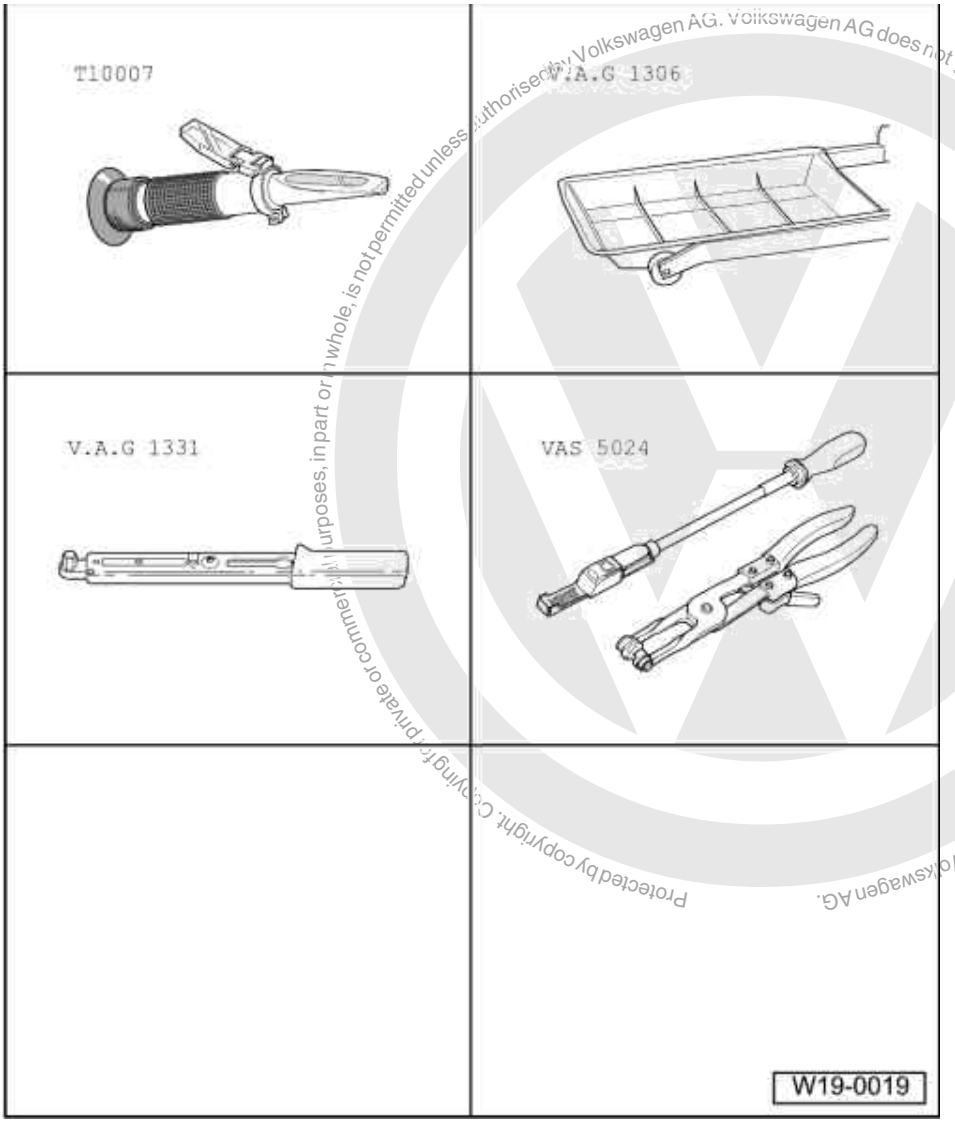


Protected by copyright. Copying for private or commercial purposes, in part or in whole, is not permitted unless authorised by Volkswagen AG. Volkswagen AG does not guarantee or accept any liability with respect to the correctness of information in this document. Copyright by Volkswagen AG.

satelettronica

**Special tools, workshop equipment, test and measuring appliances and auxiliary items required**

- T10007 Refractometer
- V.A.G 1306 Drip tray
- V.A.G 1331 Torque wrench (5...50 Nm)
- VAS 5024 Assembly tool for spring-type clips

**Removing**

*Note:*

- Always renew seals and gaskets.

- Drain coolant => Page 114

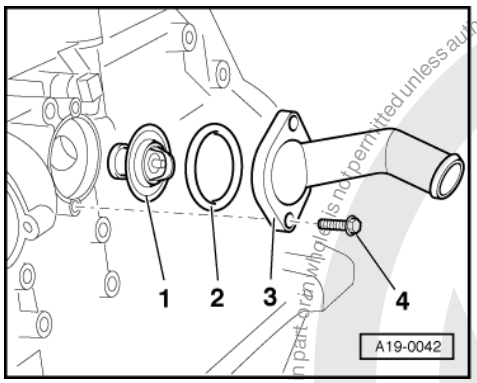


- -> Pull coolant hose off connecting flange -3-.
- Unbolt securing bolts -4- of connecting flange -3- and remove connecting flange -3- with thermostat -1-.

**Installing**

Installation is carried out in the reverse order, when doing this note the following:

- Moisten new O-ring -2- with coolant.
- Fit connecting flange -3- with thermostat -1- into engine block.

***Note:***

*The brace on the thermostat must be almost vertical.*

- Tighten securing bolts -4-.
  Tightening torque: 15 Nm
- Fill with coolant => Page 114

Protected by copyright. Copying for private or commercial purposes, in part or in whole, is not permitted unless authorised by Volkswagen AG. Volkswagen AG does not guarantee or accept any liability with respect to the correctness of information in this document. Copyright by Volkswagen AG.
satelettronica

# 20 - Fuel supply system

## 1 - Removing and installing parts of fuel supply system

### 1.1 - Removing and installing parts of fuel supply system

*Notes:*

- Hose connections are secured with either spring-type or clamp-type clips.
- Always replace clamp-type clips with spring-type clips.
- Fuel hoses in engine compartment must only be secured with spring-type clips. The use of clamp or screw-type clips is not permissible.
- Assembly tool VAS 5024 or hose clip pliers V.A.G 1921 are recommended for fitting spring-type clips.

Observe safety precautions=> Page 130 .

Observe rules for cleanliness => Page 131 .

Removing and installing fuel tank with its attachments and fuel filter => Page 124 .

Servicing accelerator mechanism => Page 144

Adjusting throttle cable => Page 145

Checking electronic accelerator control (E-Gas) => Page 147 .

Servicing parts of the activated charcoal filter system => Page 156 .

Protected by copyright. Copying for private or commercial purposes, in part or in whole, is not permitted unless authorised by Volkswagen AG. Volkswagen AG does not guarantee or accept any liability with respect to the correctness of information in this document. Copyright by Volkswagen AG.
satelettronica

## 1.2 - Removing and installing fuel tank with its attachments and fuel filter

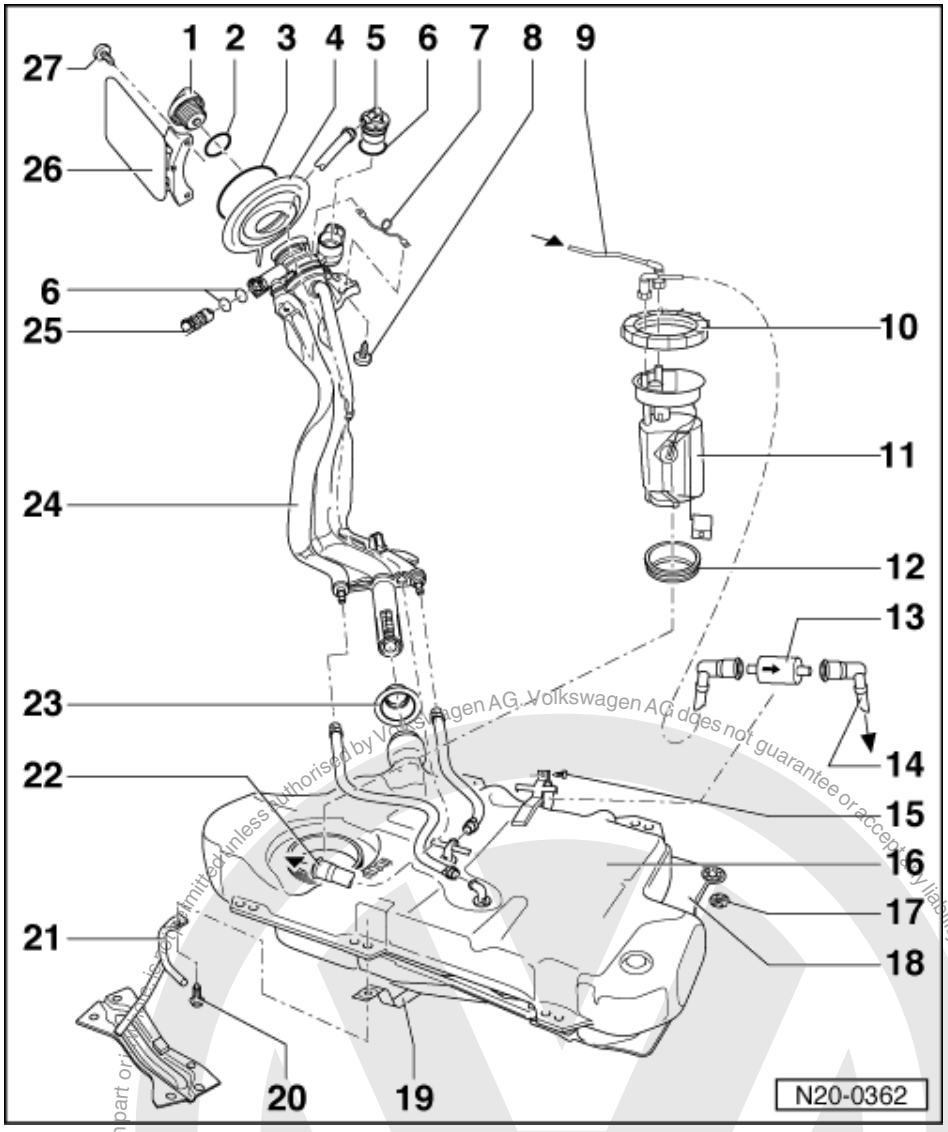


1 Cap
2 Seal
- Renew if damaged

3 Retaining ring
4 Cup
- For filler pipes

5 Gravity valve
- To remove valve unclip upwards out of support
- Check valve for through-flow
  valve vertical: open,
  valve tilted 45 °: closed

6 O-ring
- Renew if damaged

Protected by copyright. Copyright by Volkswagen AG.
Volkswagen AG does not guarantee or accept any liability with respect to the correctness of information in this document.
satelettronica

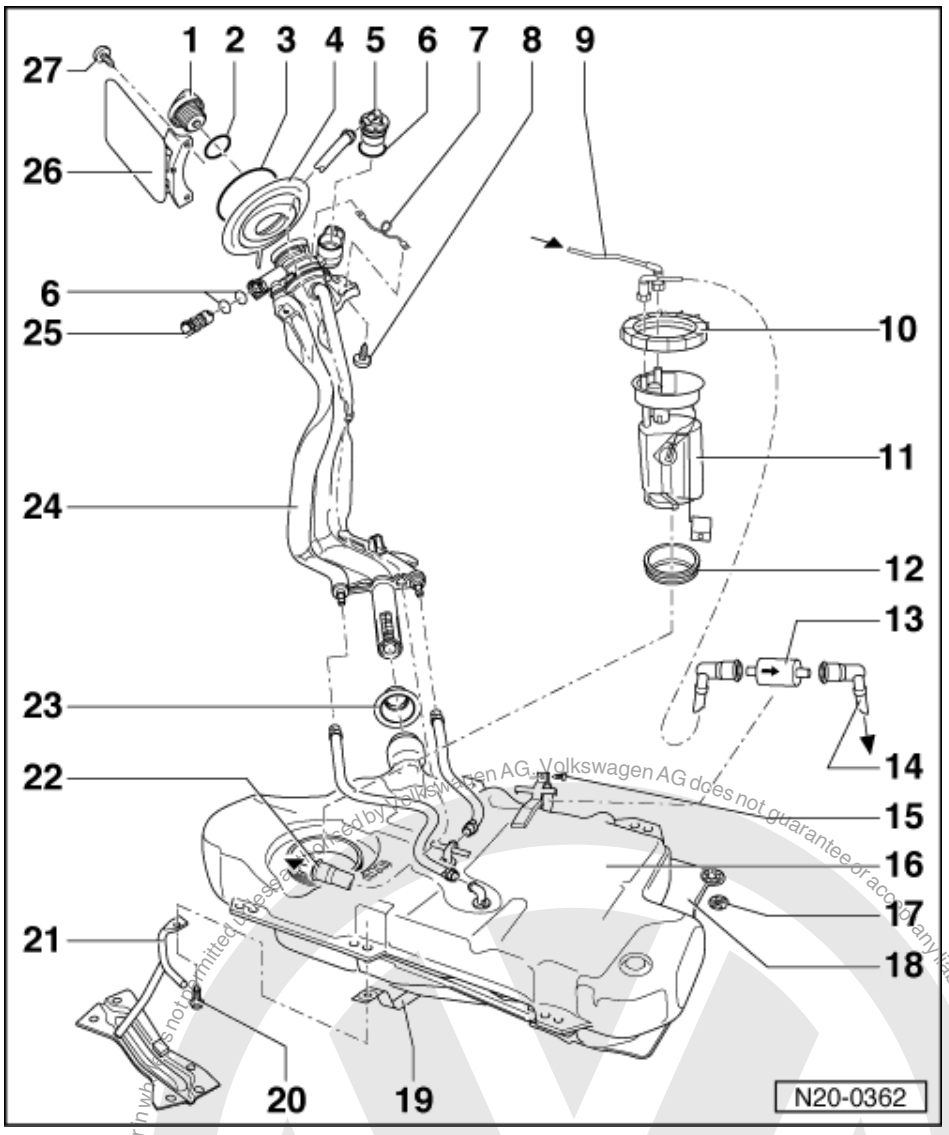


7 Earth connection
- Check securely seated

8 4 Nm

9 Return line
- Blue
- Check securely seated
- Clipped onto fuel tank
- To remove from flange press release button on connecting piece
- From fuel manifold

=> Repair group 24; Servicing injection system; Removing and installing parts of injection system Servicing injection system Removing and installing parts of injection system

10 Union nut, 75 Nm
- Remove and install with spanner 3217

satelettronica

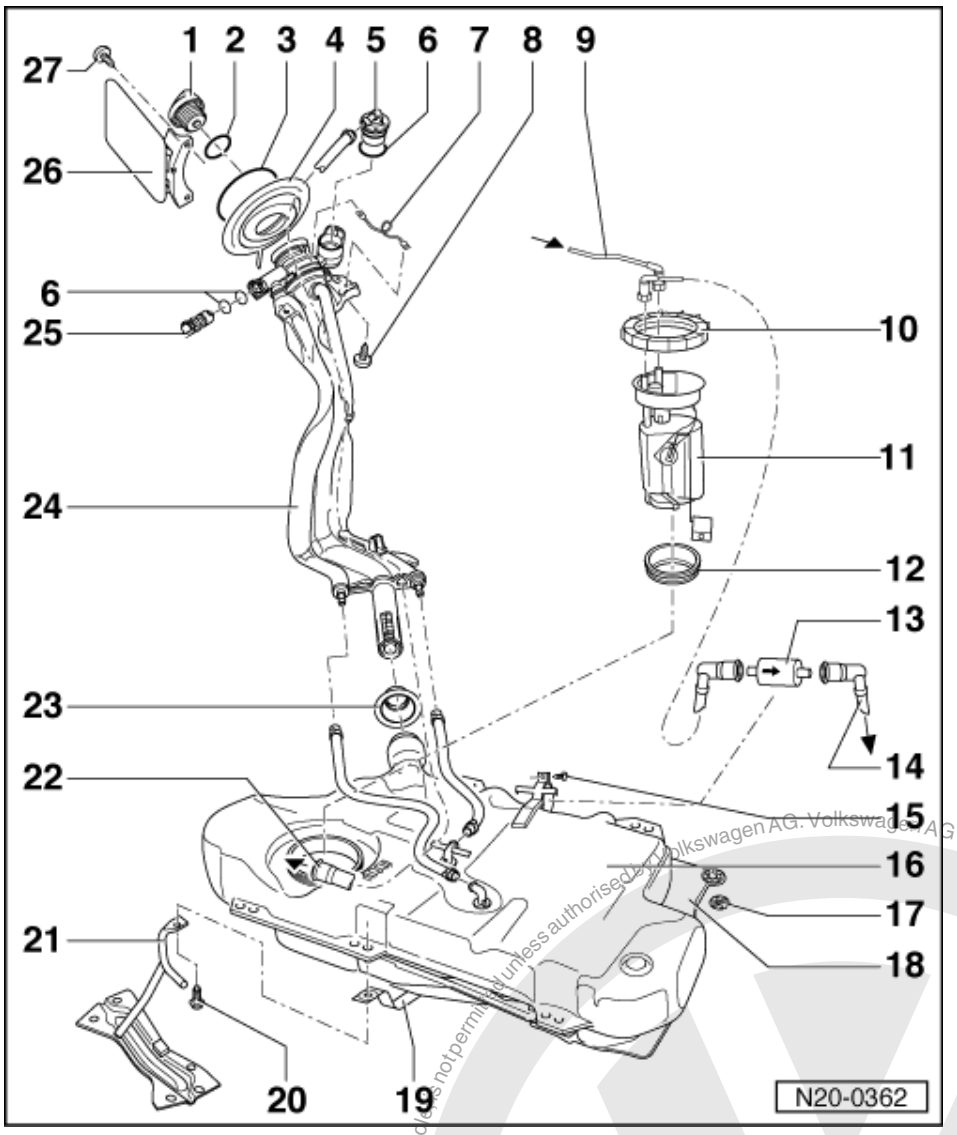


**11 Fuel delivery unit**

- Removing and installing => Page 131
- Checking fuel pump => Page 136
- Clean strainer if soiled
- Note fitting position on fuel tank => Fig. 1

**12 Sealing ring**

- Renew if damaged
- Coat with fuel when installing

**13 Fuel filter**

- Fitting position: Arrow points in direction of flow

Protected by copyright. Copying for private, commercial purposes, in part or in whole is not permitted unless authorised by Volkswagen AG. Volkswagen AG does not guarantee or accept any liability with respect to the correctness of information in this document. Copyright by Volkswagen AG.
satelettronica

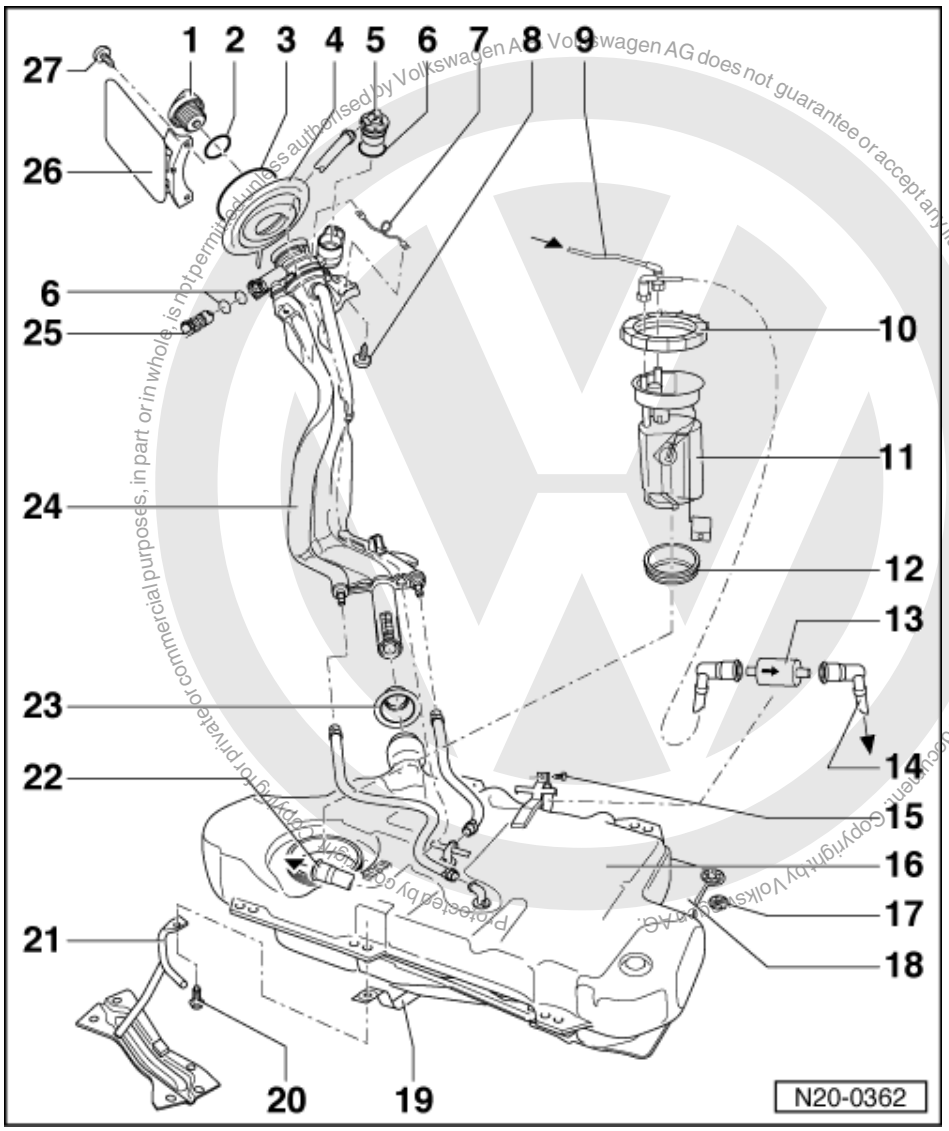


14 Supply line

- Black
- Check securely seated
- Clipped onto fuel tank
- To remove from flange press release button on connecting piece
- To fuel manifold

=> Repair group 24; Servicing injection system; Removing and installing parts of injection system Servicing injection system Removing and installing parts of injection system

15 3 Nm

16 Fuel tank

- Support with engine and gearbox jack V.A.G 1383 A when removing
- Removing and installing
  => Page 134

17 Clamping washer

- Press clamping washer from heat shield tightly onto pins on vehicle floor

satelettronica

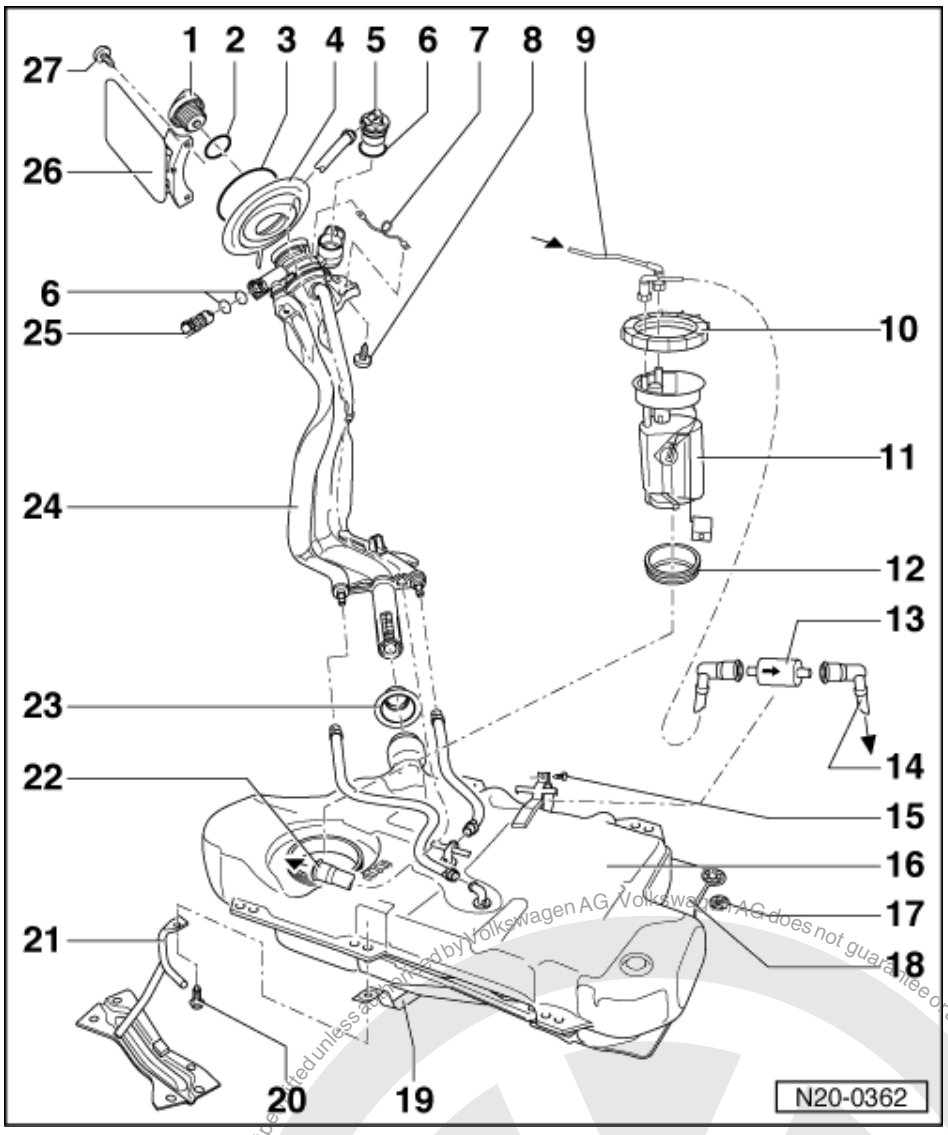


18 Heat shield
- For fuel tank

19 Securing strap

20 25 Nm

21 Connecting piece
- With exhaust system mounting

22 Vent pipe
- To activated charcoal filter
- Check securely seated
- Clipped onto fuel tank

23 Sealing boot
- After installing filler pipes fit over fuel tank connections, having turned boot inside out

24 Filler pipes
- With non-return valve

Protected by copyright. Copying for private or commercial purposes, in part or in whole, is not permitted unless authorised by Volkswagen AG. Volkswagen AG does not guarantee or accept any liability with respect to the correctness of information in this document. Copyright by Volkswagen AG.
satelettronica

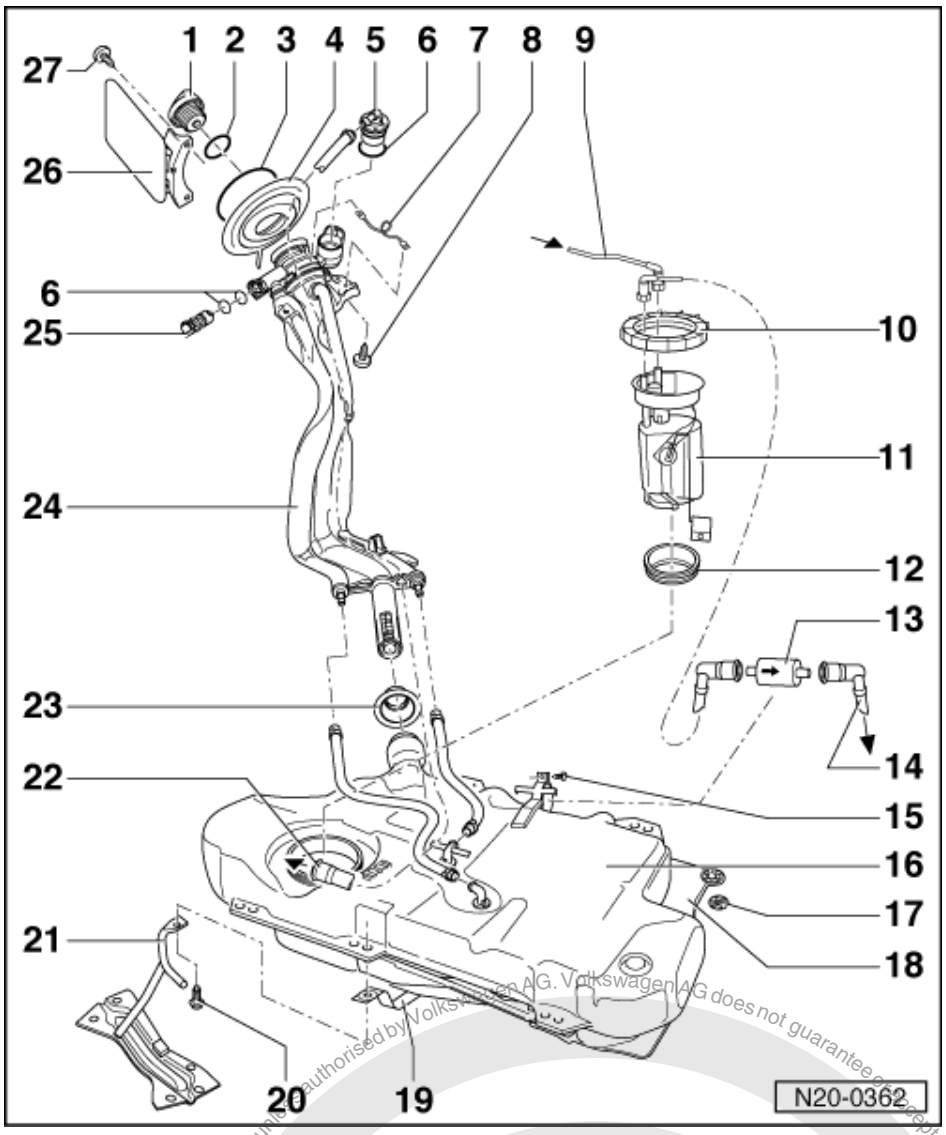


25 Vent valve

- Checking =>Fig. 2
- To remove pull locking latch lightly to inside -arrow- and pull valve out

26 Tank flap unit

- Removing and installing

=> General body repairs, Exterior; Repair group 55; Tank flap unit Tank flap unit

27 Securing screw

satelettronica
Protected by copyright. Copying for private or commercial purposes, in part or whole, is not permitted unless authorised by Volkswagen AG. Volkswagen AG does not guarantee or accept any liability with respect to the correctness of information in this document. Copyright by Volkswagen AG.

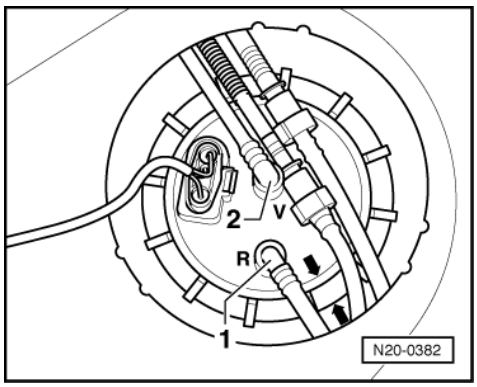


-> Fig. 1 Installation position of fuel delivery unit flange

Marking on sender must align with the marking on fuel tank -arrows-.

Blue or blue marked return pipe -1- to connection with identification -R-.

Black supply pipe -2- to connection with identification -V-.

*Note:*

*After installing fuel delivery unit flange, check that the supply, return and breather pipes are still clipped onto the fuel tank.*

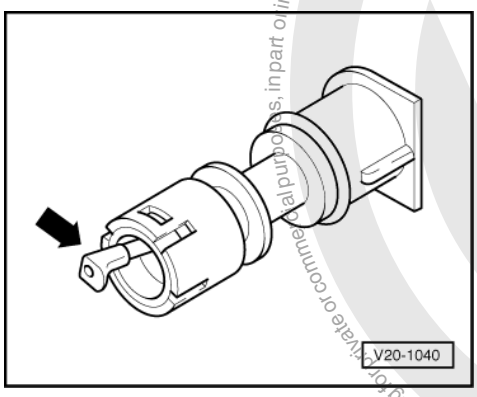


-> Fig. 2 Checking vent valve

Lever in rest position: Closed

Lever pushed in direction of arrow: Open

*Note:*

*Before installing vent valve remove fuel tank cap.*

## 1.3 - Safety precautions when working on the fuel supply system

When removing and installing the fuel gauge sender or fuel pump (fuel delivery unit) from a full or partly full fuel tank the following must be observed:

Protected by copyright. Copying for private or commercial purposes, in part or in whole, is not permitted unless authorised by Volkswagen AG. Volkswagen AG does not guarantee or accept any liability with respect to the correctness of information in this document. Copyright by Volkswagen AG.
satelettronica

Warning!
Fuel supply lines are under pressure! Before removing from hose connection wrap a cloth around the connection. Then release pressure by carefully pulling hose off connection.

- Before commencing work, switch on exhaust extraction system and place an extraction hose close to the sender opening in the fuel tank to extract escaping fuel fumes.
  If no exhaust extraction system is available, a radial fan (as long as motor is not in air flow) with a displacement greater than 15 m3/h can be used.
- Prevent skin contact with fuel! Wear fuel-resistant gloves!

## 1.4 - Rules for cleanliness

When working on the fuel supply/injection system, pay careful attention to the following "5 rules":

- Thoroughly clean all unions and the adjacent areas before disconnecting.
- Place parts that have been removed on a clean surface and cover. Do not use fluffy cloths!
- Carefully cover opened components or seal, if the repair cannot be carried out immediately.
- Only install clean components:
  Only unpack replacement parts immediately prior to installation.
  Do not use parts that have been stored loose (e.g. in tool boxes etc.).
- When the system is open:
  Do not work with compressed air if this can be avoided.
  Do not move vehicle unless absolutely necessary.

## 1.5 - Removing and installing fuel delivery unit

**Special tools, workshop equipment, testers, measuring instruments and auxiliary items required**

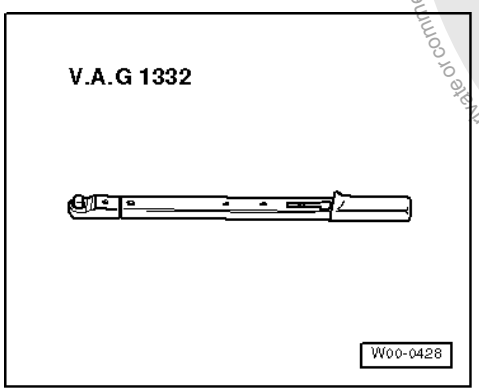


- V.A.G 1332 Torque wrench (40...200 Nm)

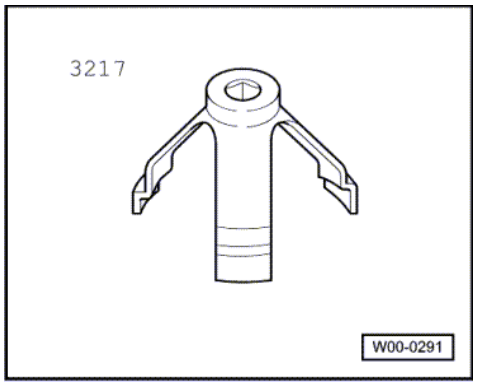


Protected by copyright. Copying for private or commercial purposes, in part or in whole is not permitted unless authorised by Volkswagen AG. Volkswagen AG does not guarantee or accept any liability with respect to the correctness of information in this document. Copyright by Volkswagen AG.
satelettronica

- 3217 Ring nut spanner

## Removing

- Note safety precautions before starting work => Page 130 .
- First check whether a coded radio is fitted. If this is the case obtain the anti-theft coding.
- With the ignition switched off disconnect battery earth strap.
- Fold rear seat bench forwards.
- Remove floor cover.

When the floor cover is removed:

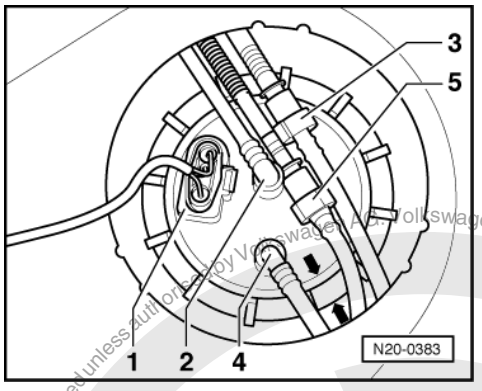


- -> Pull off connector -1-.

> Warning!
> Fuel supply lines are under pressure! Before removing from hose connection wrap a cloth around the connection. Then release pressure by carefully pulling hose off connection.

- Pull off/separate supply and return pipes -3 and 4- to fuel rail.
- Pull off/separate supply pipe -2- to fuel filter and bleeder pipe -5-.

***Note:***

*Press buttons on hose couplings to do this.*

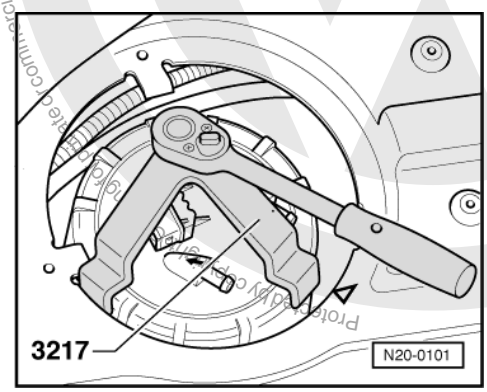


- -> Remove union nut with spanner 3217.
- Pull fuel delivery unit and seal out of opening in the fuel tank.

***Note:***

*If the delivery unit is to be renewed then drain old delivery unit before disposal.*

## Installing

- Installation of the fuel delivery unit is carried out in the reverse order.

Copyright by Volkswagen AG. Protected by copyright. Volkswagen AG does not guarantee or accept any liability with respect to the correctness of information in this document. Copyright by Volkswagen AG. Not permitted unless authorised by Volkswagen AG. Not for commercial purposes, in part or in whole.
satelettronica

*Notes:*

- Do not bend fuel sender when installing.
- Coat flange seal with fuel when fitting.
- Ensure fuel hoses are seated securely.
- After installing fuel delivery unit, check that the supply, return and vent pipes are still clipped onto fuel tank.

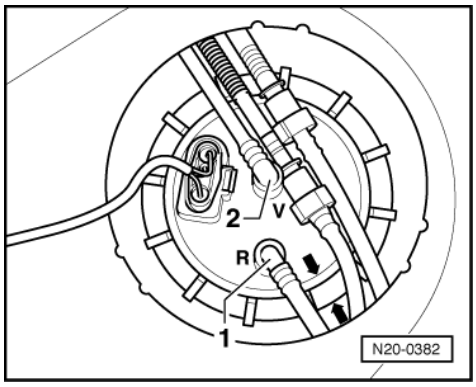


- -> Note installation position of fuel delivery unit flange:
  The marking on flange must align with marking on fuel tank -arrows-.

## 1.6 - Removing and installing fuel gauge sender

### Removing

- Removing fuel delivery unit
  => Page 131 .

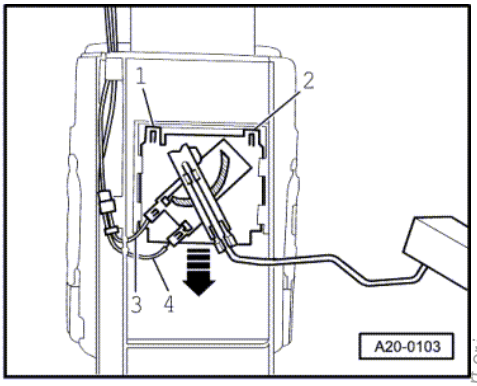


- -> Release and pull off the terminals for wires -3- and -4-.
- Lift retaining tabs -1- and -2- with a screwdriver and pull fuel gauge sender out downwards -arrows-.

### Installing

- Insert fuel gauge sender in the guides on the fuel delivery unit and push up until it engages.
- Installing fuel delivery unit
  => Page 131 .

Protected by copyright. Copying for private or commercial purposes, in part or in whole, is not permitted unless authorised by Volkswagen AG. Volkswagen AG does not guarantee or accept any liability with respect to the correctness of information in this document. Copyright by Volkswagen AG.
satelettronica

## 1.7 - Removing and installing fuel tank

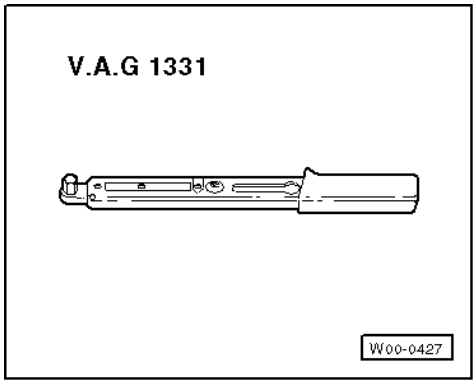


**Special tools, workshop equipment, testers, measuring instruments and auxiliary items required**

- V.A.G 1331 Torque wrench (5...50 Nm)

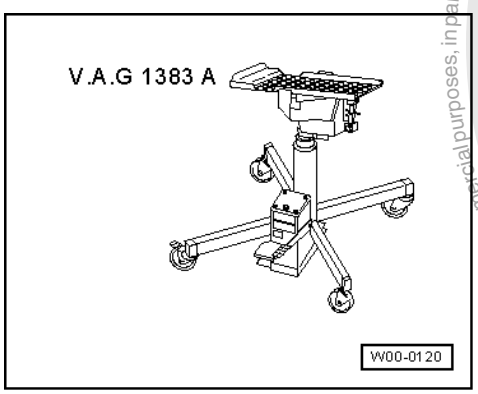


- V.A.G 1383 A Engine/gearbox jack

**Removing**

- Note safety precautions before starting work
  => Page 130
- First check whether a coded radio is fitted. If this is the case obtain the anti-theft coding.
- With the ignition switched off disconnect battery earth strap.
- Fold rear seat bench forwards.
- Remove floor cover.

When the floor cover is removed:

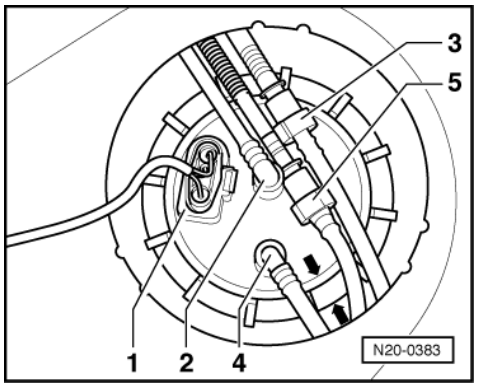


- -> Pull off connector -1-.

Protected by copyright. Copying for private or commercial purposes, in part or in whole, is not permitted unless authorised by Volkswagen AG. Volkswagen AG does not guarantee or accept any liability with respect to the correctness of information in this document. Copyright by Volkswagen AG.
satelettronica

Warning!
Fuel supply lines are under pressure! Before removing from hose connection wrap a cloth around the connection. Then release pressure by carefully pulling hose off connection.

- Pull off/separate supply and return pipes -3 and 4- to fuel rail.
- Pull off/separate supply pipe -2- to fuel filter and bleeder pipe -5-.

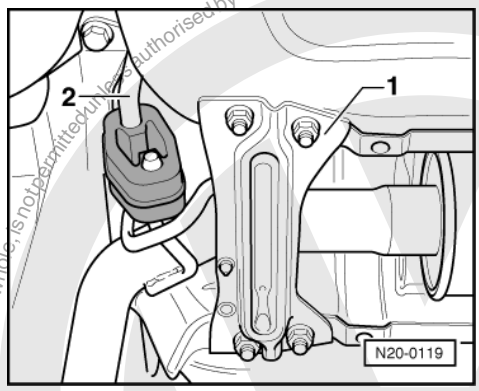


*Note:*

*Press buttons on hose couplings to do this.*

- Drain fuel tank.
- -> Remove rear connecting support -1-.
- Remove all rear exhaust system mountings -2- from body and secure the slightly lowered exhaust system with wire to body.
- Remove rear right wheel.
- Unbolt filler neck from body.
- Take filler cap off filler neck and unclip neck from cup.
- Pull off breather hoses at filler neck.
- Remove clamping disc for fuel tank heat shield.
- Unbolt fuel tank from body and lower tank slightly using engine/gearbox jack V.A.G 1383 A.
- Remove filler neck.
- Take out fuel tank together with heat shield.

### Installing

Install in reverse order but note following:

- Breather and fuel hoses are to be installed kink-free.
- Do not interchange supply and return hose (return hose blue or blue markings, supply hose black).
- Ensure fuel hoses are seated securely.
- Clip supply, return pipe and breather pipe onto fuel tank.

## 1.8 - Crash fuel shut-off

### Function

Vehicles with airbags are fitted with a crash fuel shut-off system. It reduces the danger of a fire in a crash as the fuel pump is switched off via the fuel pump relay.

When opening the fuel system:

Observe safety precautions=> Page 130 .

- Check fuel pump relay:

Copyright by Volkswagen AG. Volkswagen AG does not guarantee or accept any liability with respect to the correctness of information in this document. Copying for private or commercial purposes, in part or in whole, is not permitted unless authorised by Volkswagen AG.
Protected by copyright.
satelettronica

=> Repair group 01; Final control diagnosis; Performing final control diagnosis Final control diagnosis Performing final control diagnosis

## 1.9 - Checking fuel pump

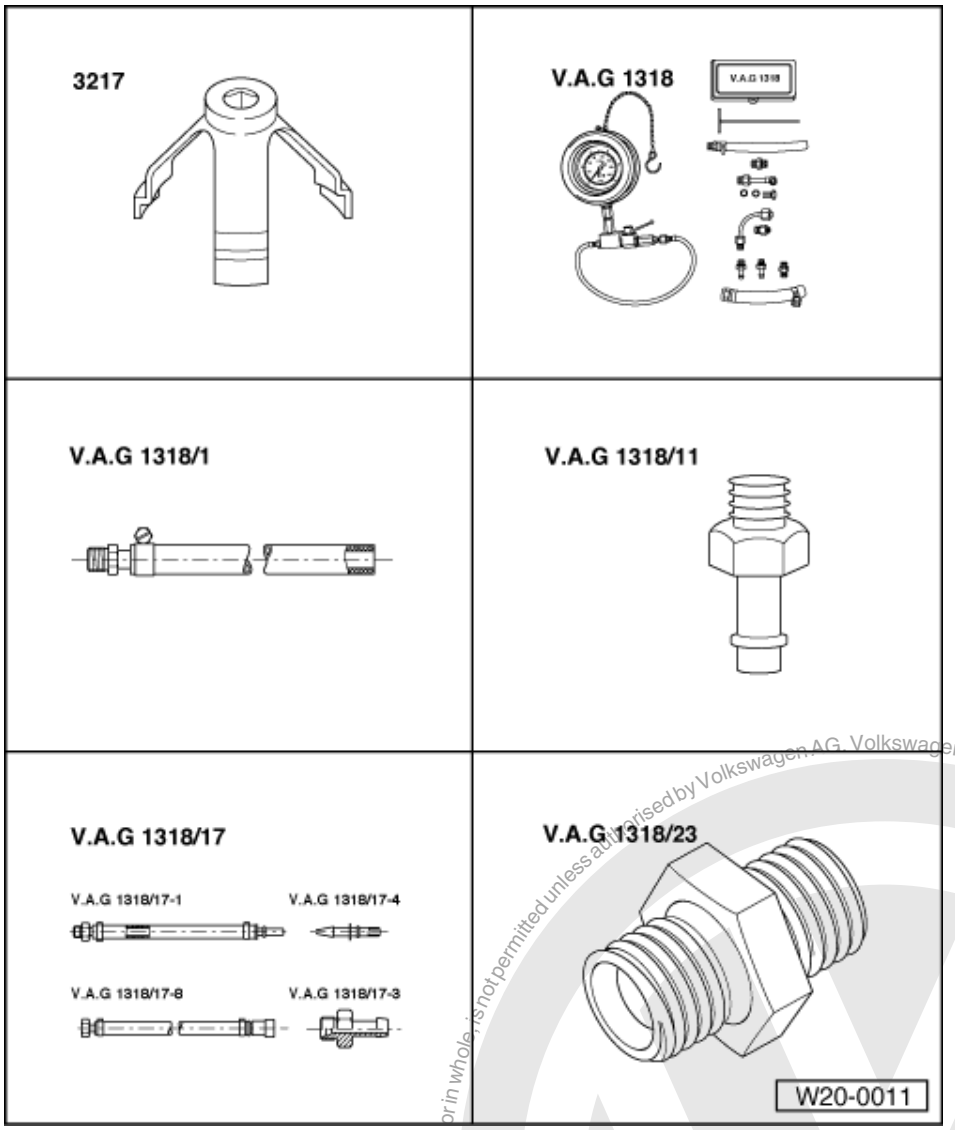


**Special tools, workshop equipment, test and measuring appliances and auxiliary items required**

- 3217 Union nut spanner
- V.A.G 1318 Pressure tester
- V.A.G 1318/1 Adapter
- V.A.G 1318/11 Adapter
- V.A.G1318/17 Adapter
- V.A.G 1318/23 Adapter

Protected by copyright. Copying for private or commercial purposes, part or in whole, is not permitted unless authorised by Volkswagen AG. Volkswagen AG does not guarantee or accept any liability with respect to the correctness of information in this document. Copyright by Volkswagen AG.
satelettronica

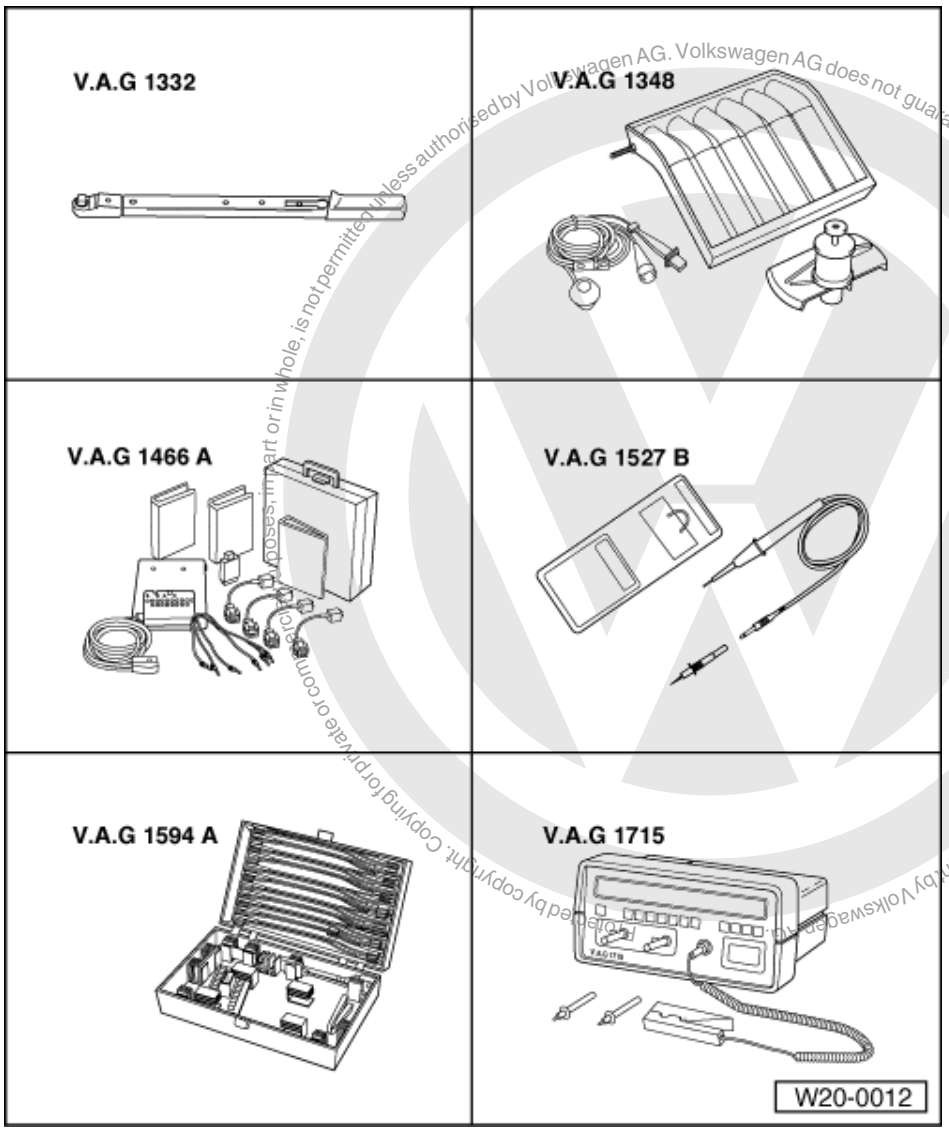


- V.A.G 1332 Torque wrench (40...200 Nm)
- V.A.G 1348 Fuel quantity comparison meter
- V.A.G 1466 Test system
- V.A.G 1527 B Diode test lamp
- V.A.G 1594 A Adapter set
- V.A.G 1715 Multimeter
- Measuring container
- Current flow diagram

**Check conditions**

- Battery voltage at least 11.5 V

Volkswagen AG. Volkswagen AG does not guarantee or accept any liability with respect to the correctness of information in this document. Copyright by Volkswagen AG. Copying for private or commercial purposes, in part or in whole, is not permitted unless authorised by Volkswagen AG. Copyright.
satelettronica

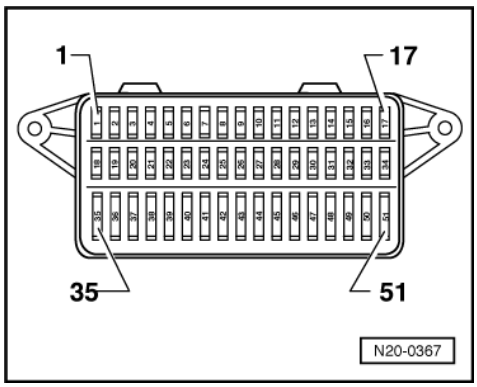


- -> Fuse No. 40 OK.

**Checking function and voltage supply**

***Note:***

*Check whether a coded radio is installed as during the forthcoming work sequences the battery earth strap must be disconnected. Obtain radio code first if necessary.*

- Switch ignition on.
  Fuel pump must be heard to run briefly.

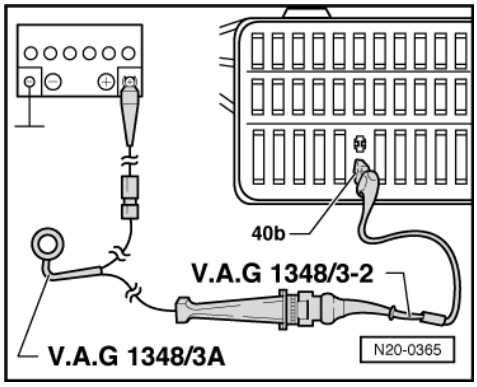


If the fuel pump does not run:

- Switch off ignition.
- Remove cover in front of fuse holder.
- -> Pull fuse No. 40 out of fuse holder.
- Connect remote control V.A.G 1348/3A with adapter cable V.A.G 1348/3-2 to contact 40b to fuel pump and battery positive (+).
- Operate remote control.

Fuel pump runs:

- Check activation of fuel pump relay:

=> Repair group 01; Final control diagnosis; Performing final control diagnosis Final control diagnosis Performing final control diagnosis

Fuel pump does not run:

- Fold rear seat bench forwards.
- Remove floor cover.

When the floor cover is removed:

Protected by copyright. Copying for private or commercial purposes, in part or in whole, is not permitted unless authorised by Volkswagen AG. Volkswagen AG does not guarantee or accept any liability with respect to the correctness of information in this document. Copyright by Volkswagen AG.
satelettronica

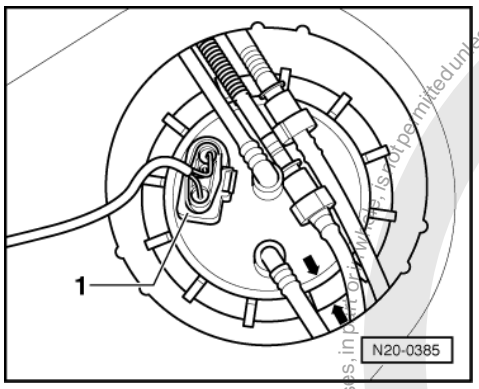


- -> Pull 4-pin connector -1- off flange on fuel delivery unit.

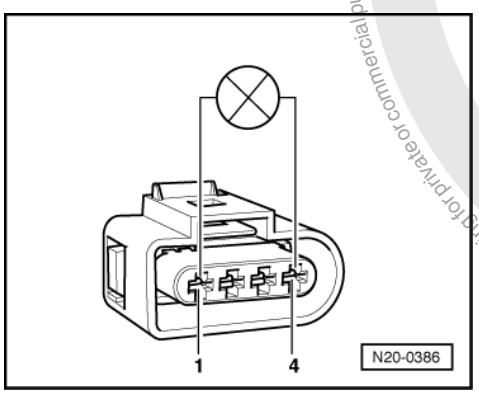


- -> Connect diode test lamp V.A.G 1527 with aux. cables from V.A.G 1594 to the outer contacts of the connector.
- Operate remote control.
  LED must light up

LED does not light up:

- Locate and eliminate open circuit using current flow diagram:

=> Current flow diagrams, Electrical fault finding and Fitting locations

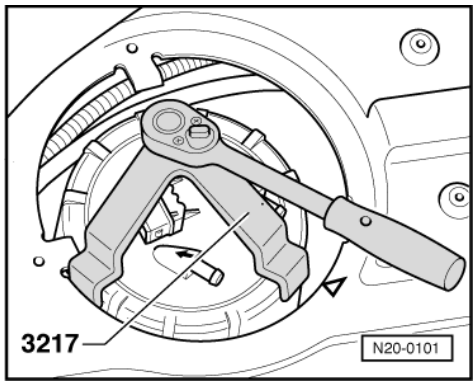


LED lights up (voltage supply OK.):

- -> Remove union nut with spanner 3217.
- Check that the electrical wires between flange and fuel pump are connected.

If no open circuit can be found:

- Fuel pump defective, renew fuel delivery unit =>Page 131 , Removing and installing fuel delivery unit.

Protected by copyright. Copying for private or commercial purposes, in part or in whole, is not permitted unless authorised by Volkswagen AG. Volkswagen AG does not guarantee or accept any liability with respect to the correctness of information in this document. Copyright by Volkswagen AG.
satelettronica

### Checking delivery rate

### Check conditions

- Voltage supply OK.
- Remote control V.A.G 1348/3A connected.

### Test sequence

- Remove filler cap from fuel tank filler neck.

> Warning!
> Fuel system is under pressure! Before opening the system place a cloth around the connection. Then release pressure by carefully loosening the connection.

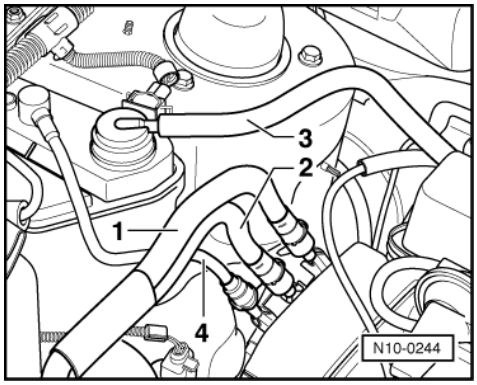


- -> Pull off supply pipe/hose -1- and collect leaking fuel with a cloth.

*Note:*

*Press buttons on hose couplings to do this.*

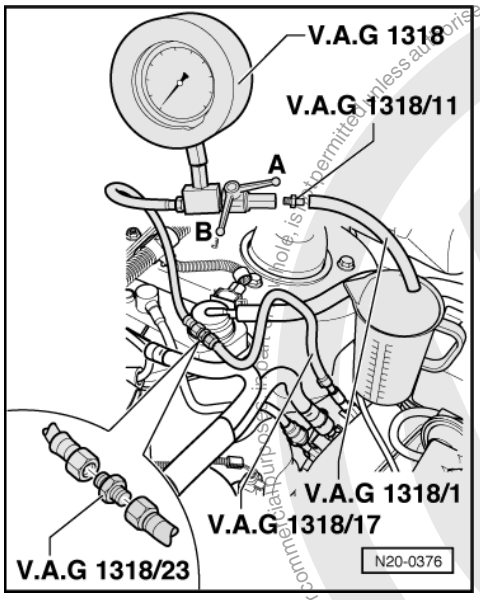


- -> Connect pressure gauge V.A.G 1318 with adapter 1318/23 and V.A.G 1318/17 to the fuel supply line.
- Push the hose V.A.G 1318/1 onto the adapter V.A.G 1318/11 on the pressure gauge and hold hose in a measuring container.
- Open the pressure gauge shut-off tap. The lever then points in the direction of flow -A-.
- Operate remote control V.A.G 1348/3A and slowly close cut-off tap, until pressure gauge shows 3 bar.
  From this point on do not move position of cut-off tap.
- Empty measuring container.

Protected by copyright. Copyright by Volkswagen AG.
Volkswagen AG does not guarantee or accept any liability with respect to the correctness of information in this document. Copyright by Volkswagen AG.
Distribution and use of this document or parts thereof is not permitted, unless authorised by Volkswagen AG.
satelettronica

- The fuel pump delivery range is dependent upon battery voltage. Therefore connect the multimeter with adapter cables from V.A.G 1594 to the vehicle battery.
- Operate remote control for
  30 seconds
  and measure battery voltage

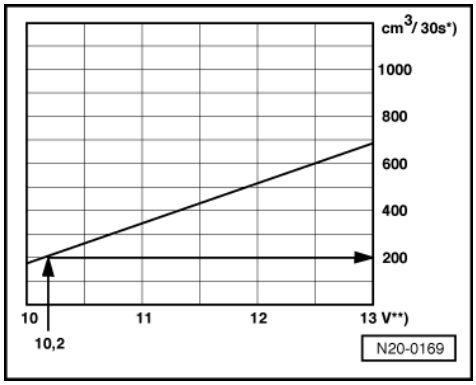


- -> Compare the quantity of fuel delivered with specification.

  *) Minimum delivery cm3/30 seconds

  **) Voltage at fuel pump with engine stopped and pump running (approx. 2 volts less than battery voltage).

Example:

During the test a voltage of 12.5 volts is measured at the battery. As the voltage at the pump is approx. 2 volts less than the battery voltage then this will equate to a minimum delivery of 200 cm3/30 s.

If the minimum delivery rate is not attained:

- Check the fuel pipes for possible restrictions (kinks) or blockages.

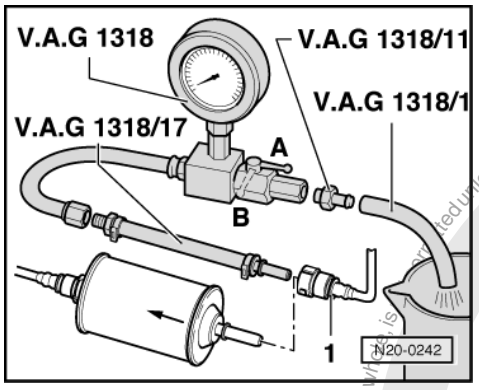


- -> Pull supply hose -1- off fuel filter inlet.
- Connect the pressure gauge V.A.G 1318 with adapter /17 on hose.
- Repeat delivery rate check.

If the minimum delivery rate is now attained:

- Renew the fuel filter.

If the minimum delivery rate is again not attained:

- Remove the fuel delivery unit and check the strainer filter for soiling.

Only when up to now no fault has been detected:

- Replace the fuel delivery unit.

satelettronica
Protected by copyright. Copying for private or commercial purposes, in any form or by any means, is not permitted unless authorised by Volkswagen AG. Volkswagen AG does not guarantee or accept any liability with respect to the correctness of information in this document. Copyright by Volkswagen AG.

If the delivery rate has been attained but nevertheless you suspect a fuel supply system fault (e.g. intermittent failure of fuel supply system):

- Check the current draw of the fuel pump as follows:
- Reconnect all disconnected fuel pipes.

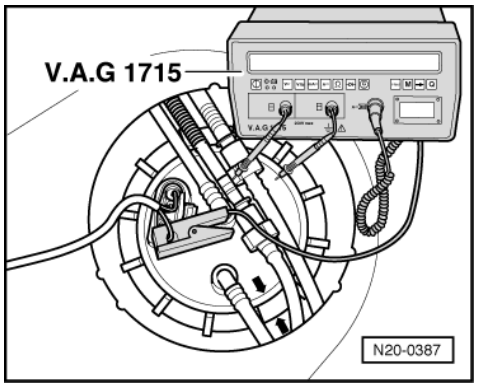


- -> Connect the multimeter V.A.G 1715 using the current clamp to the 4-pin connector -contact 1- of wiring harness.
- Start the engine and run at idling speed.
- Measure the current draw of the fuel pump.
  Specification: max. 8 amps.

*Note:*

*If the fuel system malfunction is intermittent, you can perform the check during a test drive with the help of a 2nd person.*

If the current draw is exceeded:

- Fuel pump defective, renew fuel delivery unit =>Page 131 , Removing and installing fuel delivery unit.

**Checking fuel pump non-return valve**

**Test conditions**

- Remote control V.A.G 1348/3A is still connected.

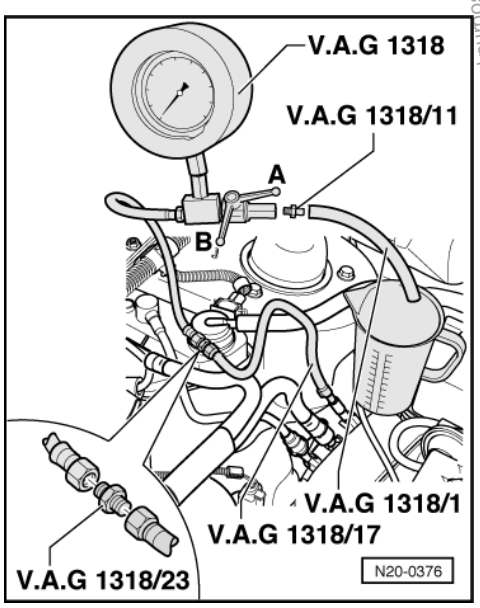


- Pressure gauge V.A.G 1318 is still connected.

Protected by copyright. Copying for private or commercial purposes, in part or in whole, is not permitted unless authorised by Volkswagen AG. Volkswagen AG does not guarantee or accept any liability with respect to the correctness of information in this document. Copyright by Volkswagen AG.
satelettronica

Test sequence

*Note:*

*With this check the fuel supply pipe connections from the fuel delivery unit to the point at which the pressure gauge V.A.G 1318 is connected will be checked for leaks at the same time.*

- -> Close pressure gauge shut-off tap (lever at right angles to throughflow direction - position -B-).
- Separate remote control at short intervals, until a pressure of
  Approx. 3 bar
  has built up.

| |
|---|
| Warning!<br>Danger of spray when opening the shut-offtap, hold container over the free connection of the pressure gauge. |

- If pressure builds up too high, lower excess pressure by carefully opening the shut-off tap.
- Watch pressure drop on gauge. After 10 minutes the pressure must not drop below
  2.5 bar.

If the pressure drops further:

- Check pipe connections for leaks.

If no fault is detected in the wiring:

- Fuel pump defective, renew fuel delivery unit =>Page 131 , Removing and installing fuel delivery unit.

Protected by copyright. Copying for private or commercial purposes, in part or in whole, is not permitted unless authorised by Volkswagen AG. Volkswagen AG does not guarantee or accept any liability with respect to the correctness of information in this document. Copyright by Volkswagen AG.

satelettronica

# 2 - Accelerator mechanism

## 2.1 - Accelerator mechanism

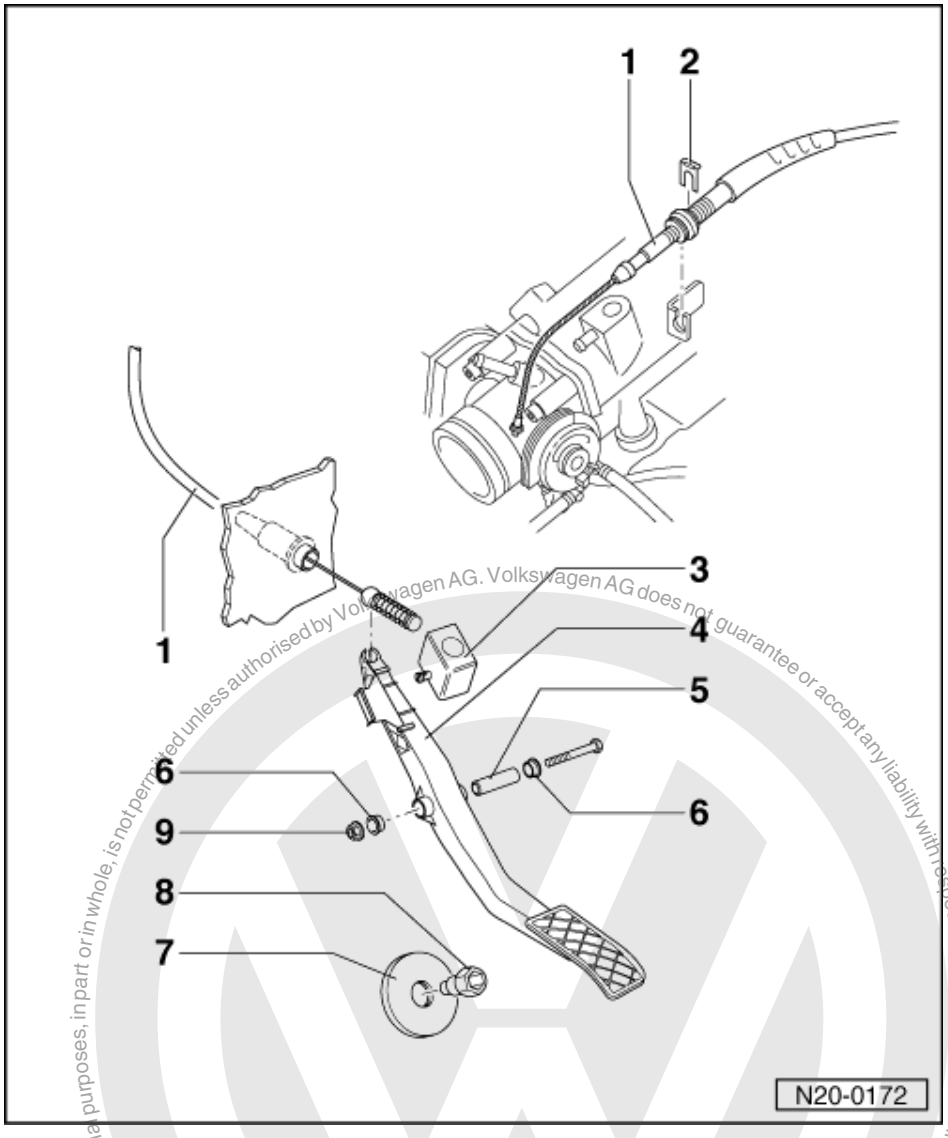


## 2.2 - Servicing accelerator mechanism

1 Accelerator cable
- Adjusting => Page 145
- Do not reuse damaged accelerator cable, replace

2 Retaining clip
- Adjusting throttle cable => Page 145

3 Balance weight
4 Accelerator pedal
5 Spacer sleeve
6 Bush
7 Washer
8 Stop bolt
9 20 Nm

Protected by copyright. Copying for private or commercial purposes, in part or in whole, is not permitted unless authorised by Volkswagen AG. Volkswagen AG does not guarantee or accept any liability with respect to the correctness of information in this document. Copyright by Volkswagen AG.
satelettronica

## 2.3 - Adjusting throttle cable

**Vehicles with manual gearbox**
**Special tools, workshop equipment, testers, measuring instruments and auxiliary items required**
- Pedal depressor

**Work sequence**
- Hook accelerator cable into accelerator pedal and cam disk on throttle valve control part.
- Pull off retaining clip for accelerator cable core wire.
- Depress accelerator pedal to full throttle position.

***Note:***
*A second mechanic or a pedal depressor is required for this.*
- Adjust accelerator cable by moving the retainer at the support bracket, so that the full throttle position is attained at the throttle valve control part.

**Vehicles with automatic gearbox**
**Special tools, workshop equipment, testers, measuring instruments and auxiliary items required**

- V.A.G 1526 A Hand multimeter

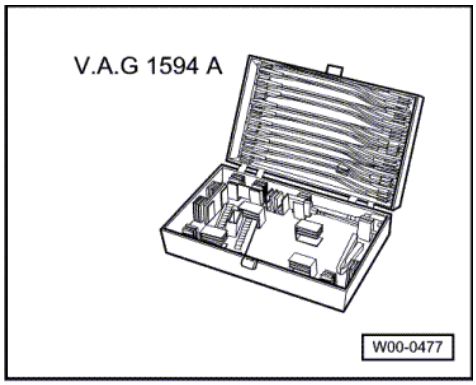


Protected by copyright. Copyright by Volkswagen AG.
Copyright by Volkswagen AG. Volkswagen AG does not guarantee or accept any liability with respect to the correctness of information in this document.
Reproduction, even in part, is permitted only for private or commercial purposes.
satelettronica

- V.A.G 1594 A Auxiliary test set
- Pedal depressor

Work sequence

- Hook accelerator cable into accelerator pedal and cam disk on throttle valve control part.
- Pull off retaining clip for accelerator cable core wire.
- Depress accelerator pedal to full throttle position.

*Note:*

*A second mechanic or a pedal depressor is required for this.*

- Adjust accelerator cable by moving the retainer at the support bracket, so that the full throttle position is attained at the throttle valve control part and the kick-down switch clicks audibly.

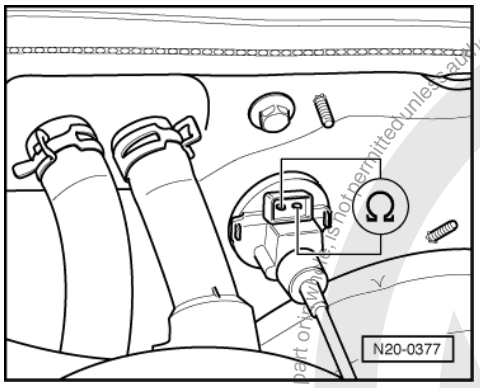


- Release accelerator pedal or remove pedal depressor.
- Pull 2-pin connector off kick-down switch (F8) in engine compartment (on the bulkhead).
- -> Connect hand multimeter V.A.G 1526 A with aux. cables from V.A.G 1594 A to kick-down switch.

- Check resistance at switch.
  Specification: ∞ω
- Slowly move accelerator pedal in direction of full throttle.

Shortly after the kick-down pressure point the resistance must drop to 0 ω.
At this point the accelerator pedal must be just off the stop.

Protected by copyright. Copying for private or commercial purposes, in part or in whole, is not permitted unless authorised by Volkswagen AG. Volkswagen AG does not guarantee or accept any liability with respect to the correctness of information in this document. Copyright by Volkswagen AG.
satelettronica

# 3 - Checking electronic power control (EPC)

## 3.1 - Checking electronic power control (EPC)

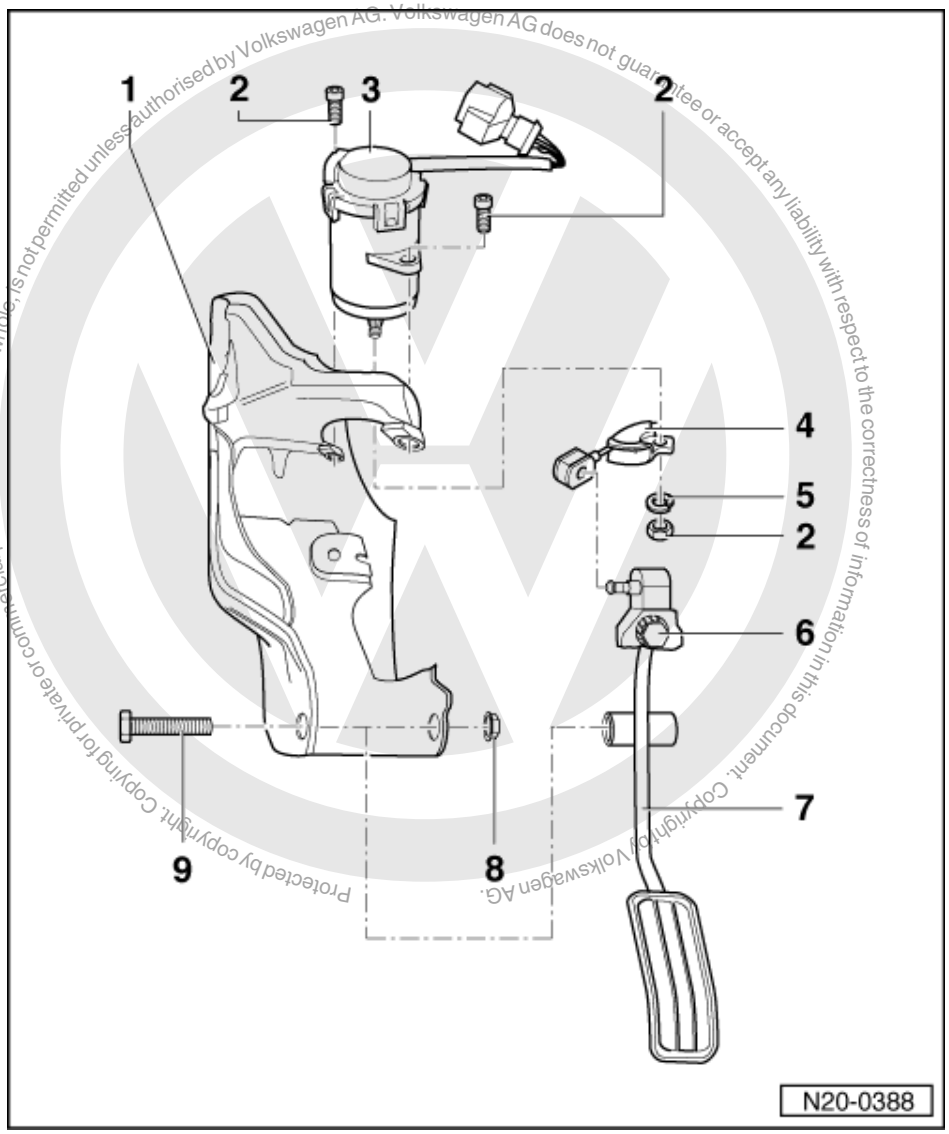


Protected by copyright. Copying for private or commercial purposes, in part or in whole, is not permitted unless authorised by Volkswagen AG. Volkswagen AG does not guarantee or accept any liability with respect to the correctness of information in this document. Copyright by Volkswagen AG.

1 Bracket
2 10 Nm
3 Accelerator pedal position sender (G79)
- The accelerator pedal position passes the position of the pedal on to the engine control unit
- To remove sender, remove footwell cover and trim below steering column

=> General body repairs, interior; Repair group 68; Removing shelves, covers and trims Removing shelves, covers and trims

- Checking =>Page 150
- Adjusting =>Page 153

4 Cable cam

satelettronica

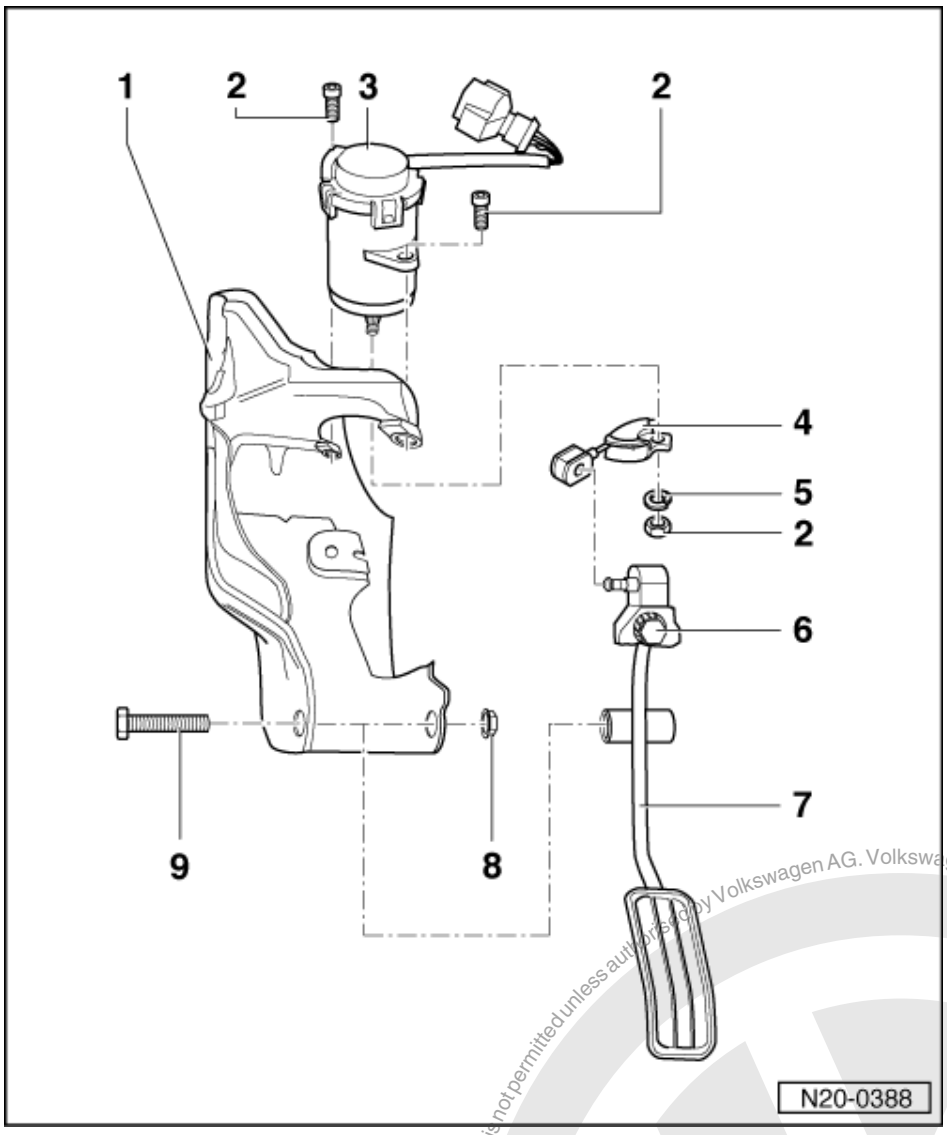


5 Spring washer
6 Adjustment bolt
- Adjusting =>Page 153

7 Accelerator pedal
8 20 Nm
9 Hexagon bolt M8

## 3.2 - Function of EPC system

With the EPC system the throttle valve is not operated by a cable. There is no mechanical connection between accelerator and throttle valve.

The position of the accelerator is transmitted to the engine control unit by two accelerator position senders (variable resistors together in a housing) which are connected to the accelerator pedal.

The position of the accelerator (drivers requirement) is the main input value for the engine control unit.

The throttle valve is operated over the complete revolution and load range by an electric motor (throttle valve positioner) in the throttle valve control part.

Protected by copyright. Copyright by Volkswagen AG. Volkswagen AG does not guarantee or accept any liability with respect to the correctness of information in this document. Copying for private or commercial purposes, in part or in whole, is not permitted unless authorised by Volkswagen AG.
satelettronica

The throttle valve is operated by the throttle valve positioner which is controlled by the engine control unit.

When the engine is not running and the ignition is switched on the engine control unit moves the throttle valve exactly as prescribed by the accelerator pedal position sender. This means that when the accelerator is depressed halfway the throttle valve positioner opens the throttle valve by the same amount, the throttle is then approximately half open.

When the engine is running (under load) the engine control unit can open or close the throttle valve independently of the accelerator pedal position sender.

This means that the throttle valve can already be completely open even though the accelerator pedal is depressed half way.

After evaluating the torque requirements of various components (e.g. air conditioning, automatic gearbox, ABS/ESP and so on), the engine control unit calculates the optimal throttle valve opening angle for the respective situation.

This also gives vastly improved consumption and exhaust emission levels at certain load conditions.

EPC is a system comprising all components which contribute to determining, controlling or monitoring the position of the throttle valve, e.g. accelerator pedal position sender, the throttle valve control part, the EPC warning lamp, the engine control unit and so on.

## 3.3 - Checking accelerator pedal position sender

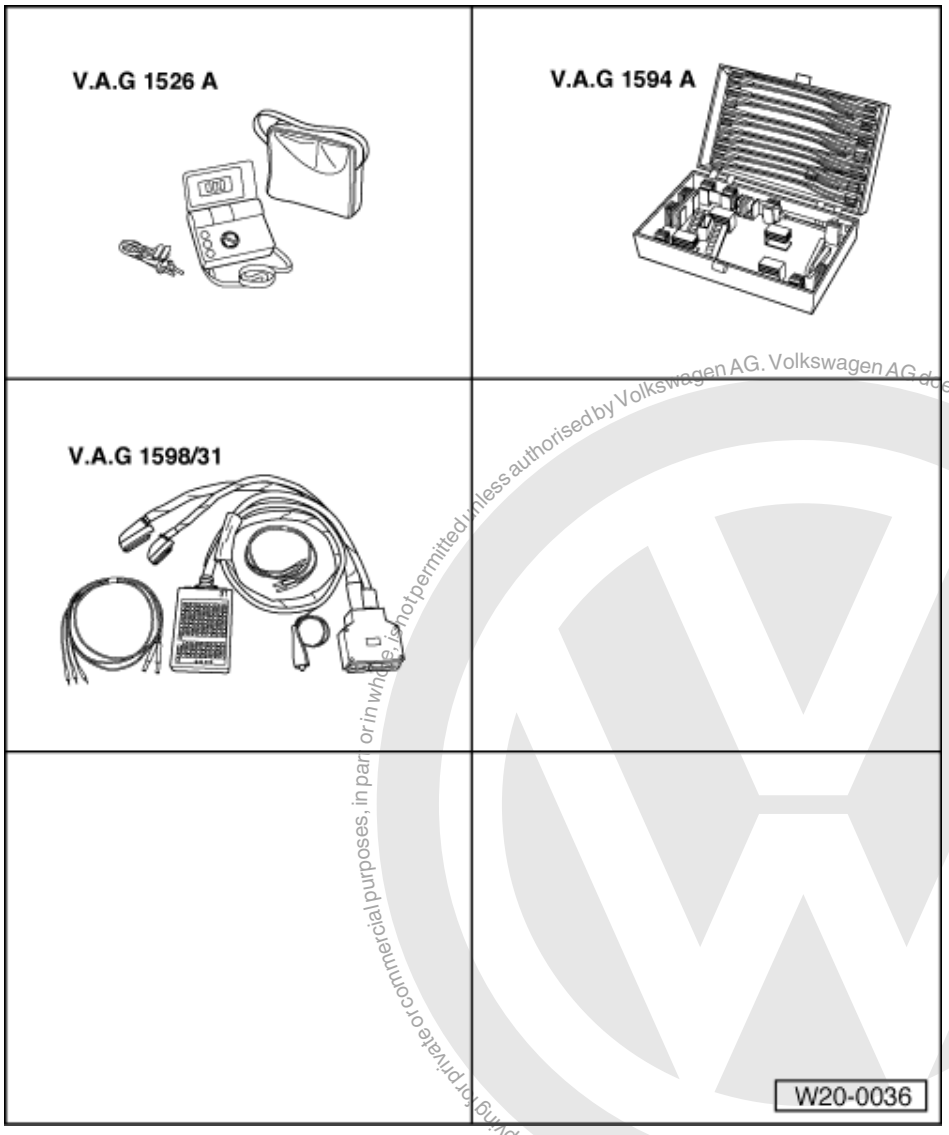


Protected by copyright. Copying for private or commercial purposes, in part or in whole, is not permitted unless authorised by Volkswagen AG. Volkswagen AG does not guarantee or accept any liability with respect to the correctness of information in this document. Copyright by Volkswagen AG
satelettronica

### Special tools, workshop equipment, test and measuring appliances and auxiliary items required

- V.A.G 1526 Hand multimeter
- V.A.G 1594 A Adapter set
- V.A.G 1598/31 Test box
- Fault reader V.A.G 1551 or vehicle system tester V.A.G 1552 with cable V.A.G 1551/3
- Current flow diagram

### Function

Both accelerator pedal position senders -G79- and -G185- on the accelerator pedal pass the driver's requirements on to the engine control unit independently of one another. Both senders are installed together in a housing.

### Check conditions

- The fuses must be OK.
- The battery voltage must be at least 11.5 V.

### Test sequence

- Connect fault reader V.A.G 1551 (V.A.G 1552) and with ignition switched on select engine electronics control unit with the "Address word" 01:

=> Repair group 01; Self-diagnosis; Connecting fault reader V.A.G 1551 and selecting engine electronics control unit Self-diagnosis Connecting fault reader V.A.G 1551 and selecting engine electronics control unit

-> Indicated on display:

```
Rapid data transfer     HELP
Select function XXX
```

- Press keys 0 and 8 for the function "Read measured value block" and confirm entry with Q key.

-> Indicated on display:

```
Read measured value block
Input display group number XXX
```

- Press keys 0, 6 and 2 for the "Display group number 62" and confirm entry with Q key.

-> Indicated on display:
(1...4 = Display zones)

```
Read measured value block 62
     1     2     3     4
```

- Check specification of sender 1 (G79) at idling speed limit stop in display zone 3.
  Specification: 6...96 %
- Check specification of sender 2 (G185) at idling speed limit stop in display zone 4.
  Specification: 3...48 %

***Note:***

*The engine control unit calculates the voltage values of the angle sender in percent relative to 5 Volt and displays these as a percentage figure (5 Volt supply voltage equates to 100 %).*

- Operate the accelerator pedal slowly until fully depressed and observe the angle sender figures in display zones 3 and 4:

  The percent figures in display zone 3 must rise evenly. The tolerance range of 6...96 % is not covered completely.
  The percent figures in display zone 4 must rise evenly. The tolerance range of 3...48 % is not covered completely.

Protected by copyright. Copying for private or commercial purposes, in part or in whole is not permitted unless authorised by Volkswagen AG. Volkswagen AG does not guarantee or accept any liability with respect to the correctness of information in this document. Copyright by Volkswagen AG.

satelettronica

*Note:*

*The figure displayed in display zone 3 must always be approximately double that displayed in display zone 4.*

End specification value not achieved:

- Press the ⇒key.
- Press keys 0 and 6 for the function "End output" and confirm entry with the Q key.
- Switch off ignition.
- Adjust accelerator pedal position sender
  =>Page 153

Display does not change or is erratic:

- Check accelerator pedal position sender as follows:
- Press the ⇒key.
- Press keys 0 and 6 for the function "End output" and confirm entry with the Q key.
- Switch off ignition.

- Remove cover in footwell (driver's side) and the trim below steering column.

=> General body repairs, interior; Repair group 68; Removing shelves, covers and trims Removing shelves, covers and trims

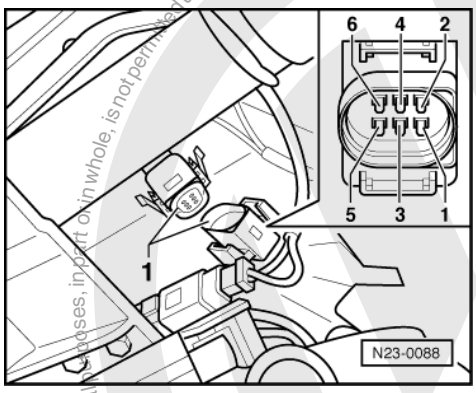


- -> Disconnect 6-pin connector -1- for accelerator pedal position sender.

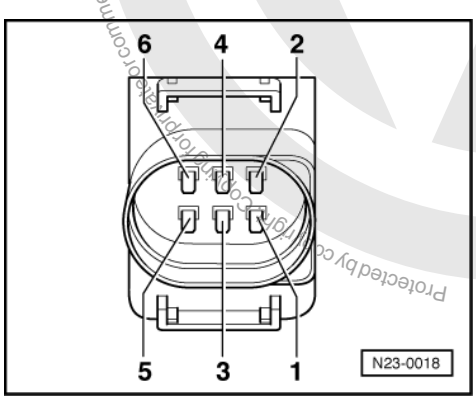


- -> Measure sender resistance between connector contacts 1+3.
  Specification:
  Accelerator pedal in idling speed position: 1.0...1.5 kω
  Accelerator pedal in full throttle position: 1.5...2.5 kω
- Measure sender resistance between connector contacts 4+6.
  Specification
  Accelerator pedal in idling speed position: 0.6...2.0 kω
  Accelerator pedal depressed: 1.1...3.0 kω

If the specifications are not obtained:

Protected by copyright. Copyright by Volkswagen AG. Volkswagen AG does not guarantee or accept any liability with respect to the correctness of information in this document. Copyright by Volkswagen AG. Unauthorised use, in part or in whole, is not permitted unless authorised by Volkswagen AG.
satelettronica

- Replace accelerator pedal position sender (G79)
  =>Page 147 , item 3 .

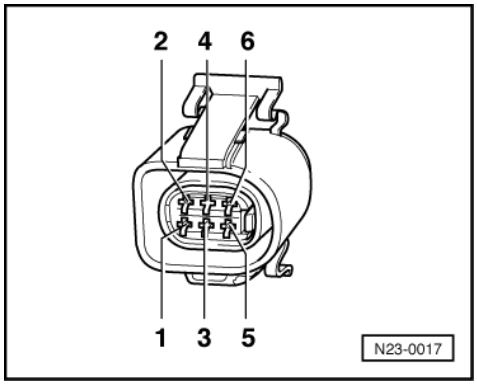


If the specifications are obtained:

**Checking voltage supply and wiring to control unit**

- Switch ignition on.
- -> Connect multimeter to measure voltage at the following contacts of the connector:
  Contact 2 + earth
  Contact 2 + 3
  Contact 5 + earth
  Contact 5 + 4
  Specification: minimum 4.5 V

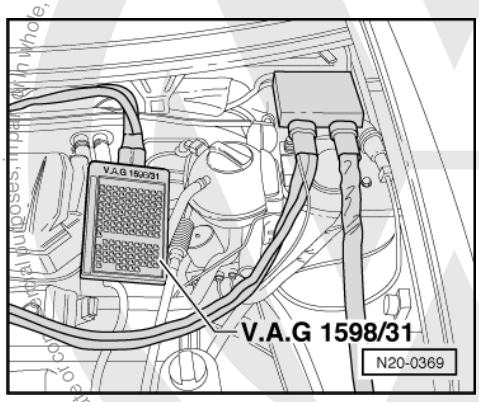


- Switch off ignition.

If the specifications are not obtained:

- -> Connect test box V.A.G 1598/31 to control unit wiring harness. The engine control unit remains disconnected.

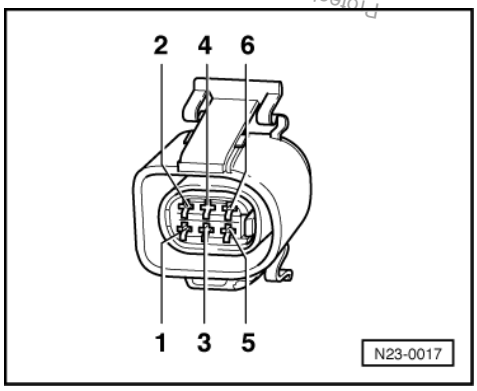


Protected by copyright. Copyright by Volkswagen AG.
Copy all or part of this document is not permitted without authorised by Volkswagen AG. Volkswagen AG does not guarantee or accept any liability with respect to the correctness of information in this document.
satelettronica

- -> Check wiring between test box and connector for open circuit according to current flow diagram.
  Contact 1+ socket 51
  Contact 2+ socket 18
  Contact 3+ socket 50
  Contact 4+ socket 45
  Contact 5+ socket 19
  Contact 6+ socket 64
  Wire resistance: max. 1.5 ω
- Additionally check wires for short to one another, to vehicle earth and to battery positive.
  Specification: ∞ω

If no fault is detected in the wiring:

- Renew engine control unit:

=> Repair group 23; Renewing engine control unit, coding and matching; Renewing engine control unit Renewing engine control unit, coding and matching Renewing engine control unit

## 3.4 - Adjusting pedal position sender

**Special tools, workshop equipment, testers, measuring instruments and auxiliary items required**

- Fault reader V.A.G 1551 (or vehicle system tester V.A.G 1552) with cable V.A.G 1551/3

**Work sequence**

(Accelerator pedal position sender removed)

Adjusting cable cam:

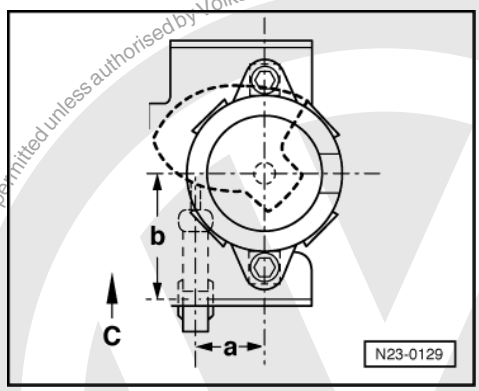


- -> Install cable cam in position as illustrated.
- Secure cable cam to sender so that the dimensions shown are adhered to when facing forwards.
  a = 22 ±0.05 mm
  b = 41±0.05 mm
  c = Forwards

***Note:***

*The cable cam eye must be parallel to the forward direction.*

- Then secure accelerator position sender with preassembled cable cam to mounting block.
- Reconnect sender 6 pin connector.

Fine adjustment with sender installed:

- Connect fault reader V.A.G 1551 (V.A.G 1552) and with ignition switched on select engine electronics control unit with the "Address word" 01:

Copyright by Volkswagen AG. Volkswagen AG does not guarantee or accept any liability with respect to the correctness of information in this document. Copying for private or commercial purposes, in part or in whole, is not permitted unless authorised by Volkswagen AG.
satelettronica

=> Repair group 01; Self-diagnosis; Connecting fault reader V.A.G 1551 and selecting engine electronics control unit Self-diagnosis Connecting fault reader V.A.G 1551 and selecting engine electronics control unit

-> Indicated on display:

```
Rapid data transfer     HELP
Select function XXX
```

- Press keys 0 and 8 for the function "Read measured value block" and confirm entry with Q key.

-> Indicated on display:

```
Read measured value block
Input display group number XXX
```

- Press keys 0, 6 and 2 for the "Display group number 62" and confirm entry with Q key.

-> Indicated on display:
(1...4 = Display zones)

```
Read measured value block 62
     1     2     3     4
```

- Check specification of sender 1 (G79) at idling stop in display zone 3.
  Specification: 6...96 %
- Check specification of sender 2 (G185) at idling stop in display zone 4.
  Specification: 3...48 %

***Note:***

*The figure displayed in display zone 3 must always be approximately double that displayed in display zone 4.*

- Operate the accelerator pedal slowly until fully depressed and observe the angle sender figures in display zones 3 and 4:

  The percent figures in display zone 3 must rise evenly. The tolerance range of 6...96 % is not covered completely.
  The percent figures in display zone 4 must rise evenly. The tolerance range of 3...48 % is not covered completely.

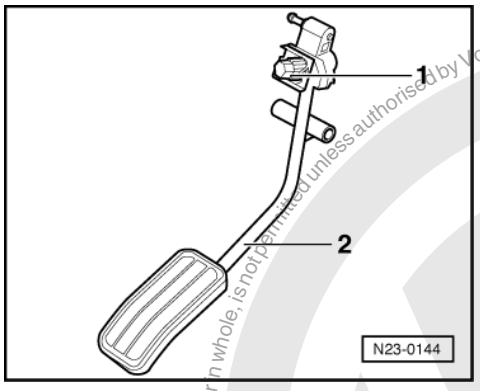


- -> Adjust accelerator pedal -2-, if necessary by turning the adjustment screw -1-, so that when accelerator pedal is almost fully depressed
  the following is displayed in
  display zone 3: 70... 96 %
  and in
  display zone 4: 35... 48 %.

***Note:***

*Adjustment is to be carried out with accelerator pedal in full throttle position.*

Protected by copyright. Copying for private or commercial purposes, in part or in whole, is not permitted unless authorised by Volkswagen AG. Volkswagen AG does not guarantee or accept any liability with respect to the correctness of information in this document. Copyright by Volkswagen AG.

satelettronica

# 4 - Activated charcoal filter system

## 4.1 - Activated charcoal filter system

## 4.2 - Function

Depending upon the air pressure and ambient temperature, fuel vapour will form above the level of fuel in the tank.

The activated charcoal filter system prevents these HC emissions escaping to the atmosphere.

Fuel vapours pass through a gravity valve (which closes at an angle of 45 °) located at the highest point in the tank and through a pressure retention valve into the activated charcoal filter in limited quantities.

The activated charcoal stores these vapours like a sponge.

When the Lambda control is active when driving (engine warm), the solenoid valve (N80, also called regeneration valve), is activated (pulsed) from engine control unit depending upon load and engine speed. The opening period is dependent on the input signals.

Intake manifold vacuum draws fresh air through the vent opening on the underside of the activated charcoal filter during the purging procedure (regenerating the activated charcoal). The fuel vapours stored in the activated charcoal and fresh air are pulse-fed for combustion.

The pressure retention valve prevents fuel vapours from being drawn from the tank when the solenoid valve is open and intake manifold vacuum is present. It therefore ensures that the evacuation of the activated charcoal filter has priority.

No voltage (e.g. wiring open circuit) the solenoid valve is closed and the activated charcoal filter will not be purged.

***Notes:***

- Hose connections are secured with either spring-type or clamp-type clips.
- Always replace clamp-type clips with spring-type clips.
- For fitting the spring-type clips, assembly tool VAS 5024 is recommended.

Observe safety precautions=> Page 130 .

Observe rules for cleanliness => Page 131 .

Protected by copyright. Copyright by Volkswagen AG.
Copyright by Volkswagen AG. Permitted for authorised Volkswagen Dealers and does not guarantee or assume any liability with respect to the correctness of information in this document.
For personal and commercial purposes in part or whole is not permitted.
satelettronica

## 4.3 - Servicing parts of the activated charcoal filter system

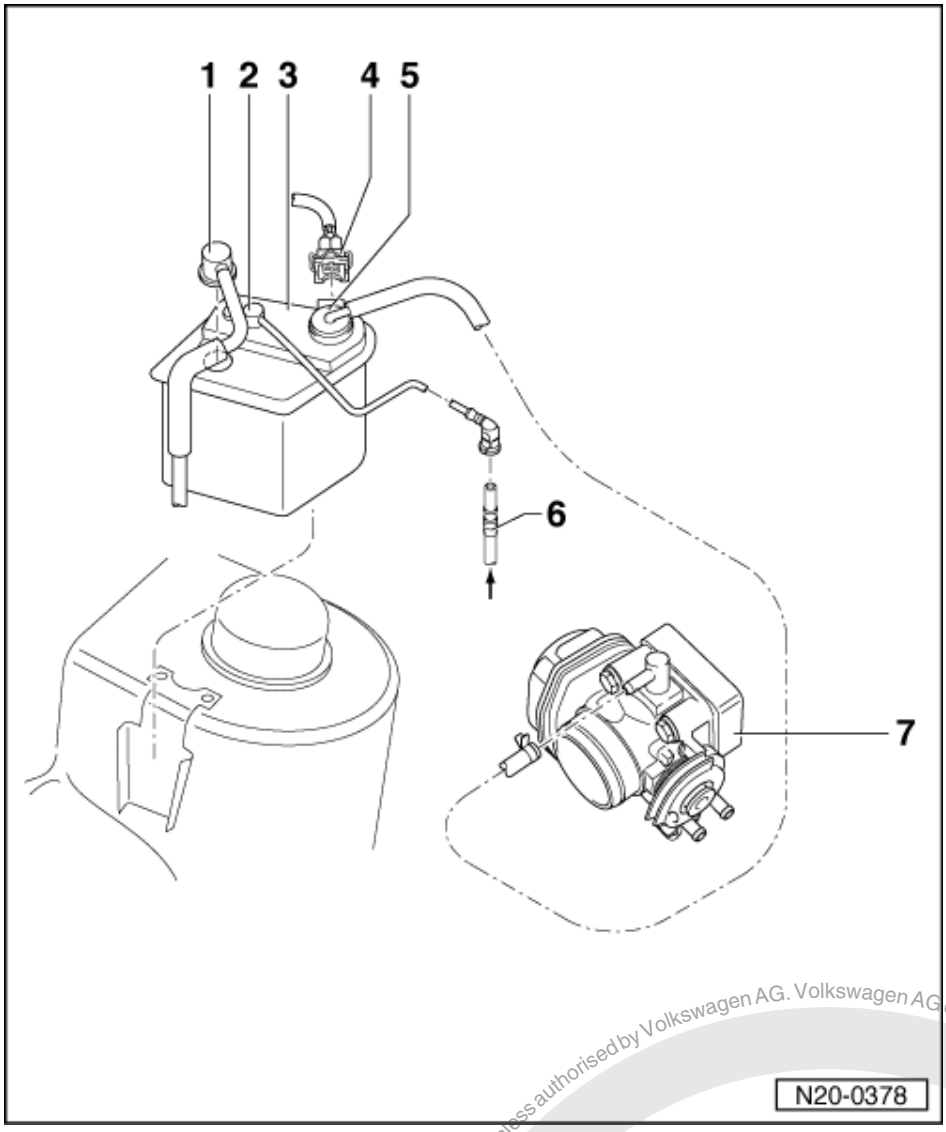


1 Breather connection
- To atmosphere
- Check securely seated

2 Pressure retention valve with connecting hose
- Shuts-off the tank venting when the solenoid valve (N80) is open and intake manifold pressure is present

3 Activated charcoal filter
- Location: in engine compartment, right
- Secured to body

4 Connector
- Black, 2-pin
- For solenoid valve 1

Protected by copyright. Copying for private or commercial purposes, in part or in whole, is not permitted unless authorised by Volkswagen AG. Volkswagen AG does not guarantee or accept any liability with respect to the correctness of information in this document. Copyright by Volkswagen AG.
satelettronica

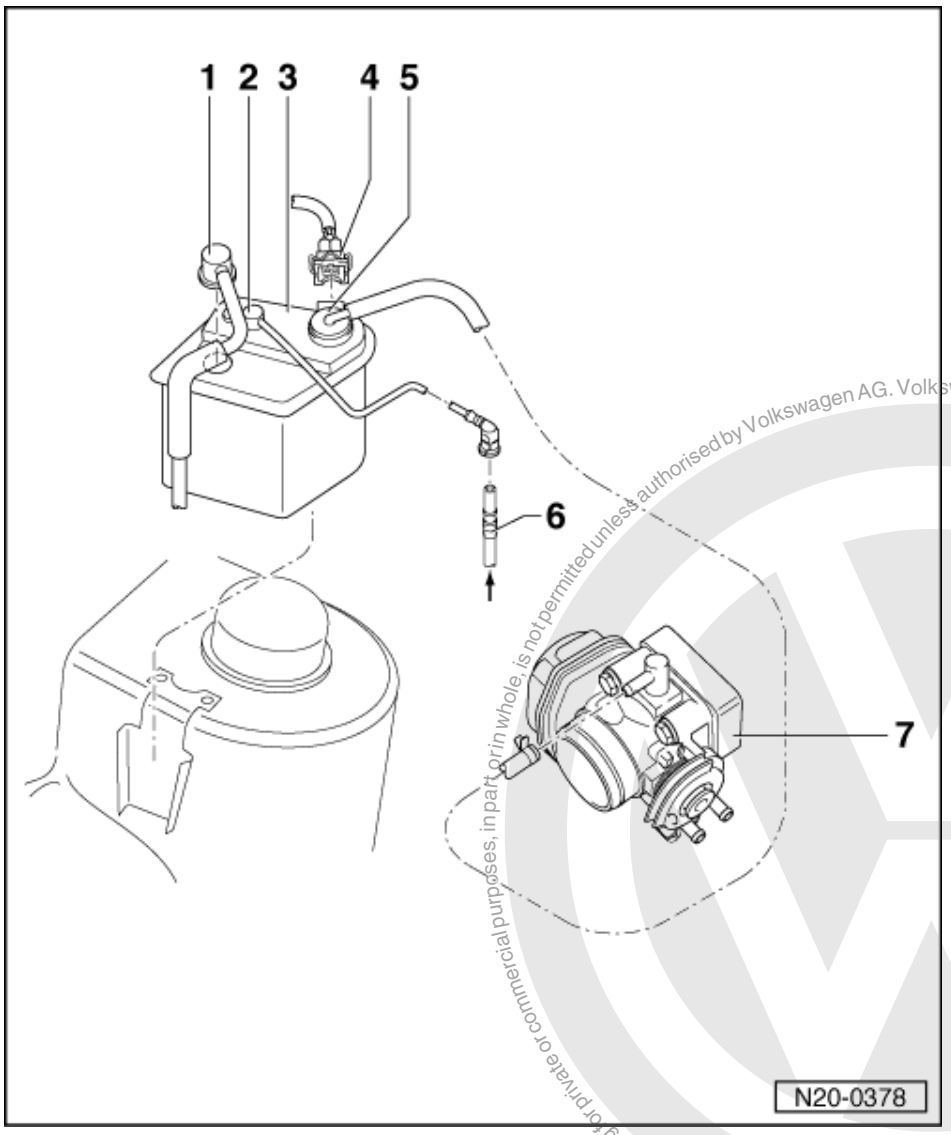


5 Solenoid valve1 (N80)

- Valve closed with ignition switched off
- When the engine is warm the valve will be activated from the engine control unit (pulsed)
- Checking activation:

=> Repair group 01; Final control diagnosis; Performing final control diagnosis Final control diagnosis Performing final control diagnosis

6 Vent pipe

- Check securely seated
- From gravity valve on fuel tank
  => Page 124 , Item 5

7 Throttle valve control part

- Vehicles with electronic power control without cable disc for accelerator cable

Protected by copyright. Copying for private or commercial purposes, in part or in whole, is not permitted unless authorised by Volkswagen AG. Volkswagen AG does not guarantee or accept any liability with respect to the correctness of information in this document. Copyright by Volkswagen AG.
satelettronica

Protected by copyright. Copyright by Volkswagen AG. Volkswagen AG does not guarantee or accept any liability with respect to the correctness of information in this document. Copyright by Volkswagen AG. Reproduced or disclosed to third parties without express authorisation is prohibited. Copying for private or commercial purposes, in part or in whole, is not permitted unless authorised by Volkswagen AG.

## 4.4 - Checking fuel tank breather

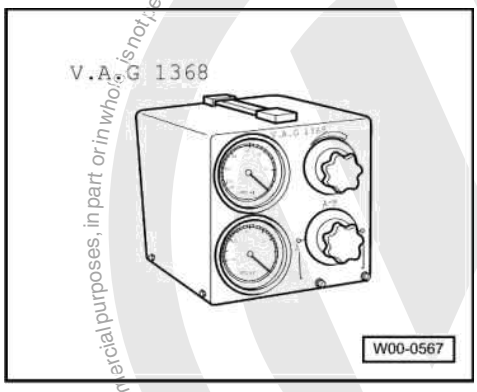


**Special tools, workshop equipment, testers, measuring instruments and auxiliary items required**

- V.A.G 1368 Vacuum tester

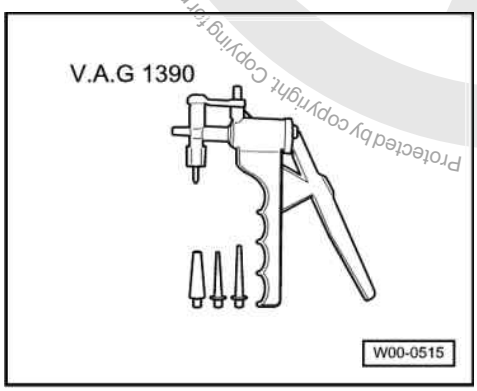


- V.A.G 1390 Hand vacuum pump

**Test sequence**

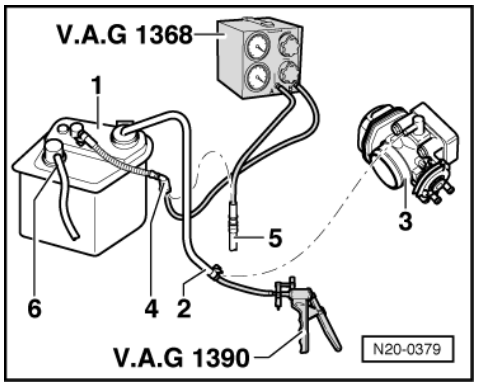


- -> Pull breather pipe/hose -2- from activated charcoal filter -1- off at throttle valve control part -3-.
- Connect hand vacuum pump V.A.G 1390 to pipe/hose -2-.
- Connect breather pipe/hose -5- from fuel tank to activated charcoal filter to vacuum tester V.A.G 1368 - connection A-.
- Connect vacuum tester V.A.G 1368 -connection B- to breather pipe/hose -4-.
- Set vacuum tester to position -B-.
- Introduce final control diagnosis and select activated charcoal filter solenoid valve (N80):

=> Repair group 01; Final control diagnosis; Performing final control diagnosis Final control diagnosis Performing final control diagnosis

- Operate hand vacuum pump V.A.G 1390 several times.
  Vacuum must not

satelettronica

build up.

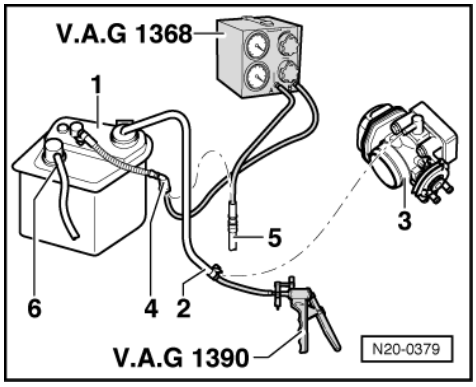


If vacuum builds up:

- -> Check breather connection -6- on activated charcoal filter -1- for soiling and clean if necessary.

If vacuum does not build up:

- Remove fuel filler cap.

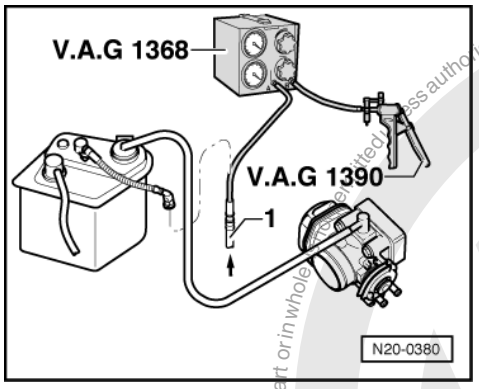


- -> Connect hand vacuum pump V.A.G 1390 to vacuum tester V.A.G 1368 -connection B-.
- Set vacuum tester to -A/B- position.
- Operate V.A.G 1390 several times. Vacuum must not build-up.

If vacuum builds-up:

- Check gravity valve => Page 124 , Item 5 .
- Check pipe/hose -1- from fuel tank for blockage.

If vacuum does not build up:

- Refit fuel filler cap.
- Operate hand vacuum pump V.A.G 1390 several times. Vacuum must not build up.

***Note:***

*If the fuel level in the tank is low the hand vacuum must be operated at least 20...30 times.*

If vacuum builds up:

- Replace fuel tank cap.

Protected by copyright. Copying for private or commercial purposes, in part or in whole, is not permitted unless authorised by Volkswagen AG. Volkswagen AG does not guarantee or accept any liability with respect to the correctness of information in this document. Copyright by Volkswagen AG.
satelettronica

# 26 - Exhaust system

## 1 - Removing and installing parts of exhaust system

### 1.1 - Removing and installing parts of exhaust system

*Notes:*

- After working on the exhaust system ensure that the system is not under stress, and that it has sufficient clearance from the bodywork. If necessary, loosen double clamps and align silencer and exhaust pipe so that sufficient clearance is maintained to the bodywork and the support rings are evenly loaded.
- Renew self-locking nuts.
- Components marked with * will be checked by self-diagnosis:

=> Repair group 01; Fault memory; Interrogating and erasing fault memory of engine control unit Fault memory Interrogating and erasing fault memory of engine control unit

Protected by copyright. Copyright by Volkswagen AG.
Copyright by Volkswagen AG. Volkswagen does not guarantee or accept any liability with respect to the correctness of information in this document.
Protected by copyright. Copying for private or commercial purposes, in part or in whole, is not permitted unless authorised by Volkswagen AG.
satelettronica

## 1.2 - Exhaust manifold, front exhaust pipe and catalyst with attachments

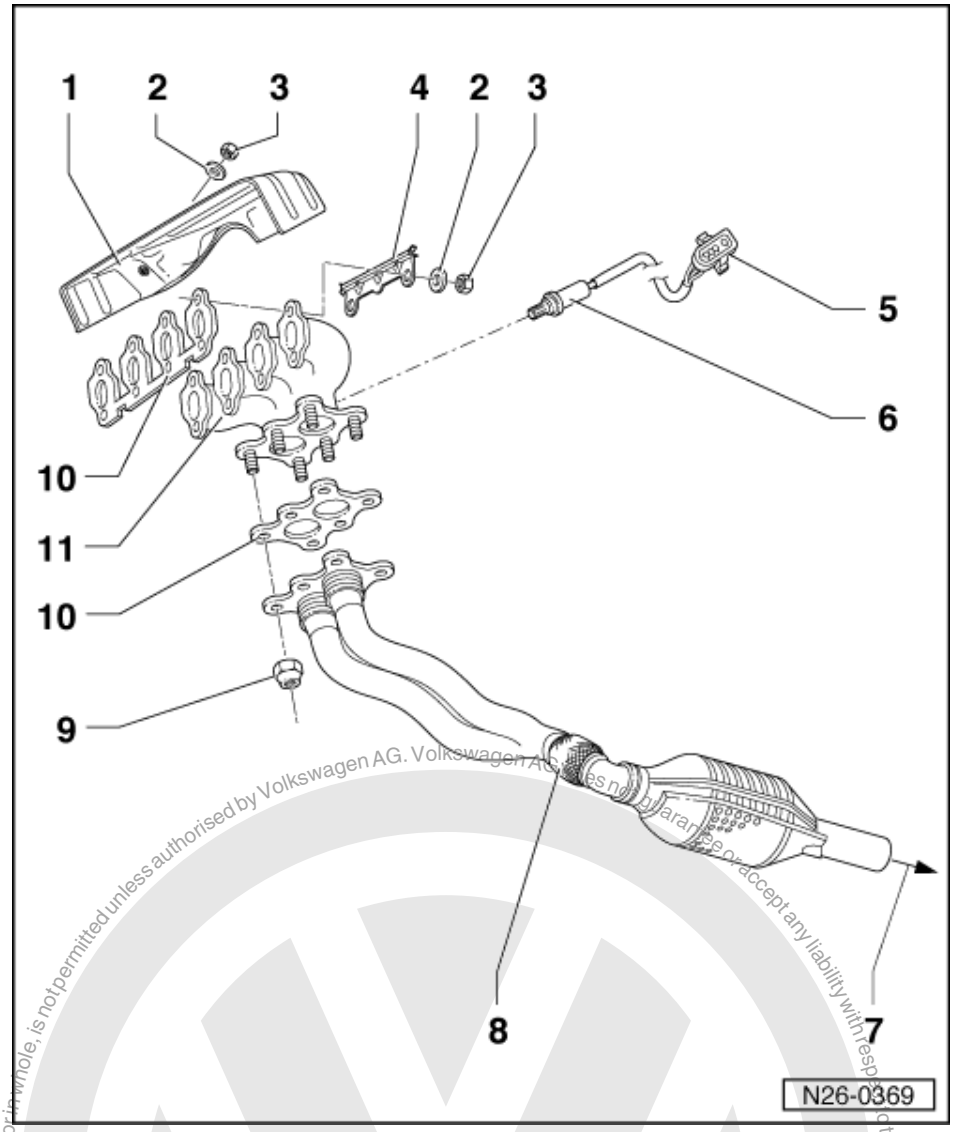


Engine codes: AEH, AKL

Engine codes: APF, AUR
=>Page 164

1 Heat shield
2 Washer
3 25 Nm
4 Bracket
5 4-pin connector
- Brown
- Contacts 3 and 4 gold plated
- For Lambda probe and Lambda probe heating

Protected by copyright. Copyright by Volkswagen AG. Volkswagen AG does not warrant or accept any liability with respect to the correctness of information in this document. Copyright by Volkswagen AG. Reproduction, in whole or in part, for commercial purposes, is not permitted unless authorised by Volkswagen AG.
satelettronica

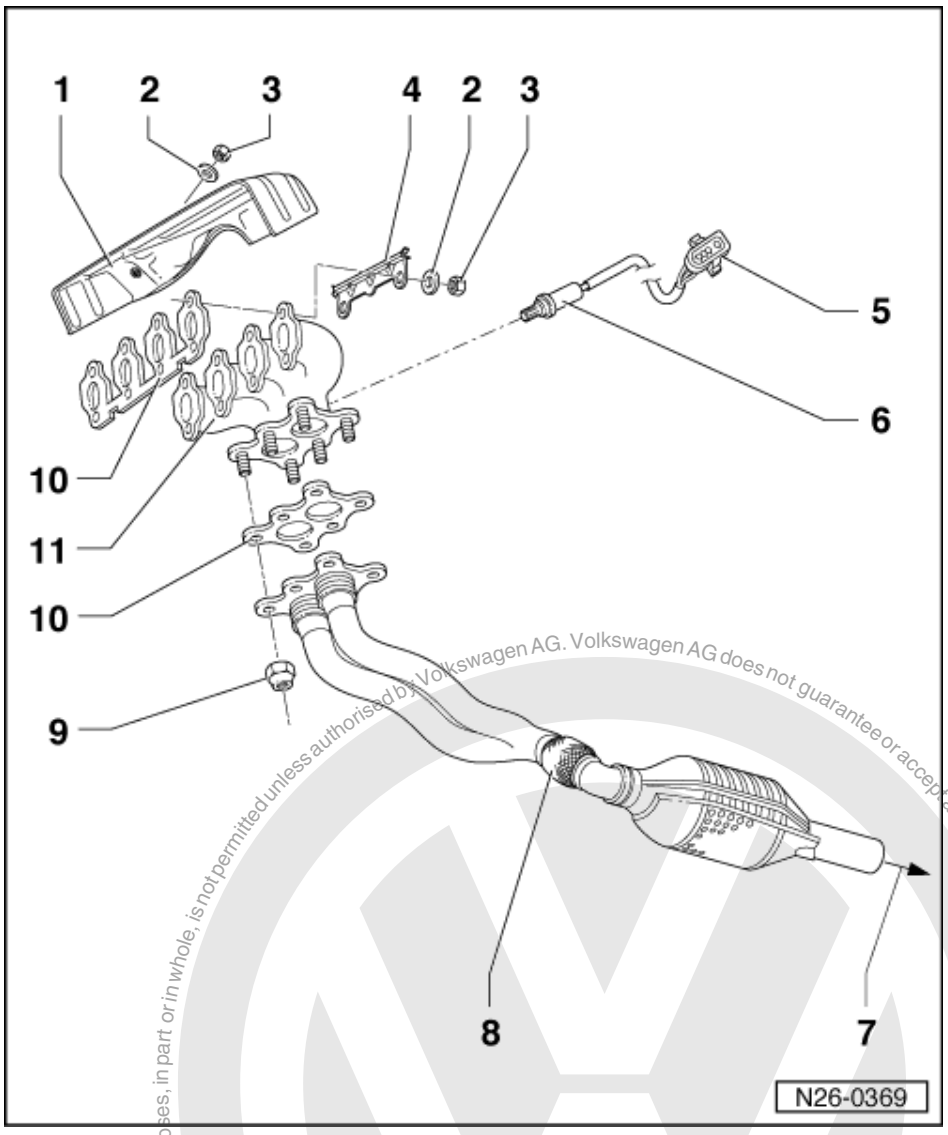


6 Lambda probe (G39)*, 50 Nm

- Grease only the threads with "G 052 112 A3"; "G 052 112 A3" must not get into the slots on the probe body
- Remove and install with Lambda probe open ring spanner set 3337
- Checking:

=> Repair group 24; Checking function; Checking Lambda probe and Lambda regulation Checking function Checking Lambda probe and Lambda regulation

7 To front silencer

8 Front exhaust pipe with catalyst

- To remove, remove assembly mounting

=> Running gear, axles, steering; Repair group 40; Servicing front suspension strut; Removing and installing assembly mounting Servicing front suspension strut Removing and installing assembly mounting

Copyright by Volkswagen AG. Volkswagen AG does not guarantee or accept any liability with respect to the correctness of information in this document. Copyright by Volkswagen AG. Protected by copyright. Copying for private or commercial purposes, in part or in whole, is not permitted unless authorised by Volkswagen AG.

satelettronica

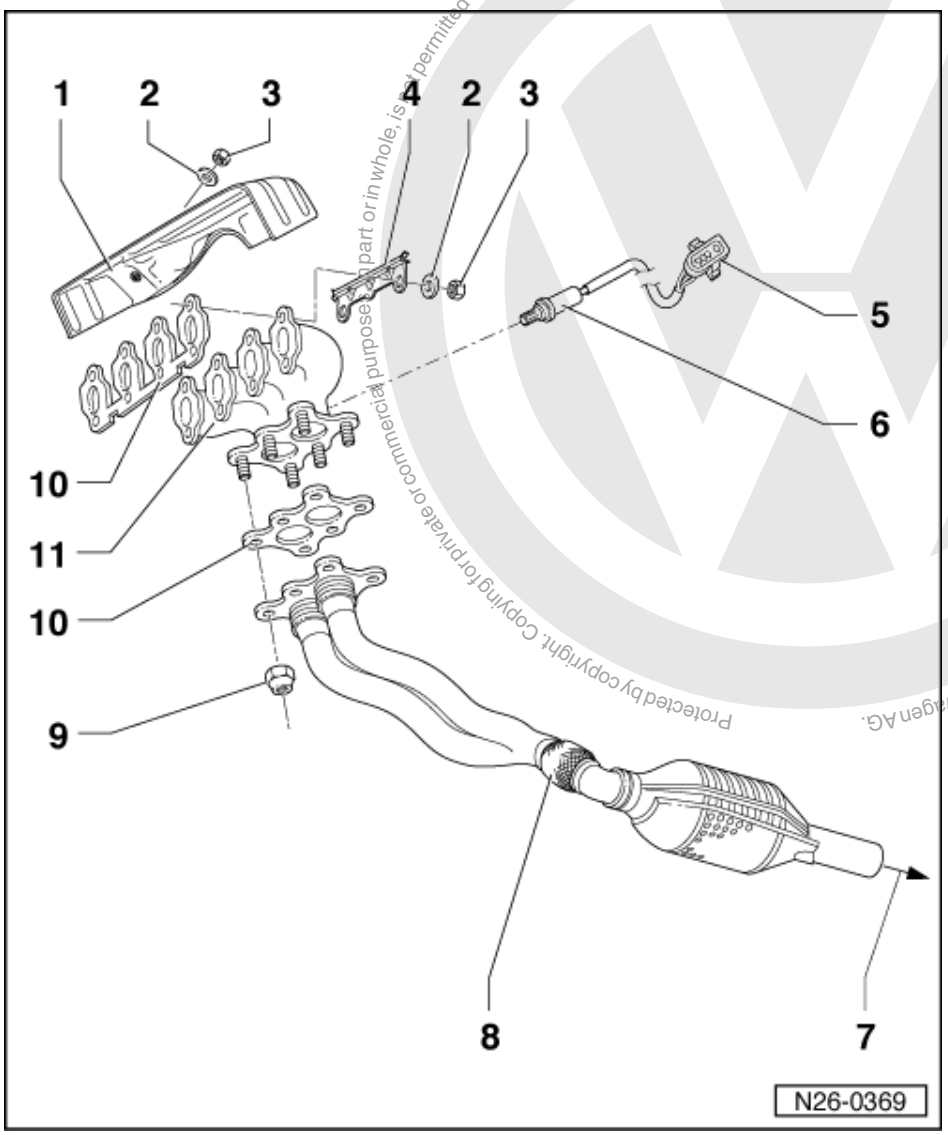


9 40 Nm
10 Gasket
- Renew

11 Exhaust manifold

Protected by copyright. Copying for private or commercial purposes, in part or in whole, is not permitted unless authorised by Volkswagen AG. Volkswagen AG does not guarantee or accept any liability with respect to the correctness of information in this document. Copyright by Volkswagen AG.
satelettronica

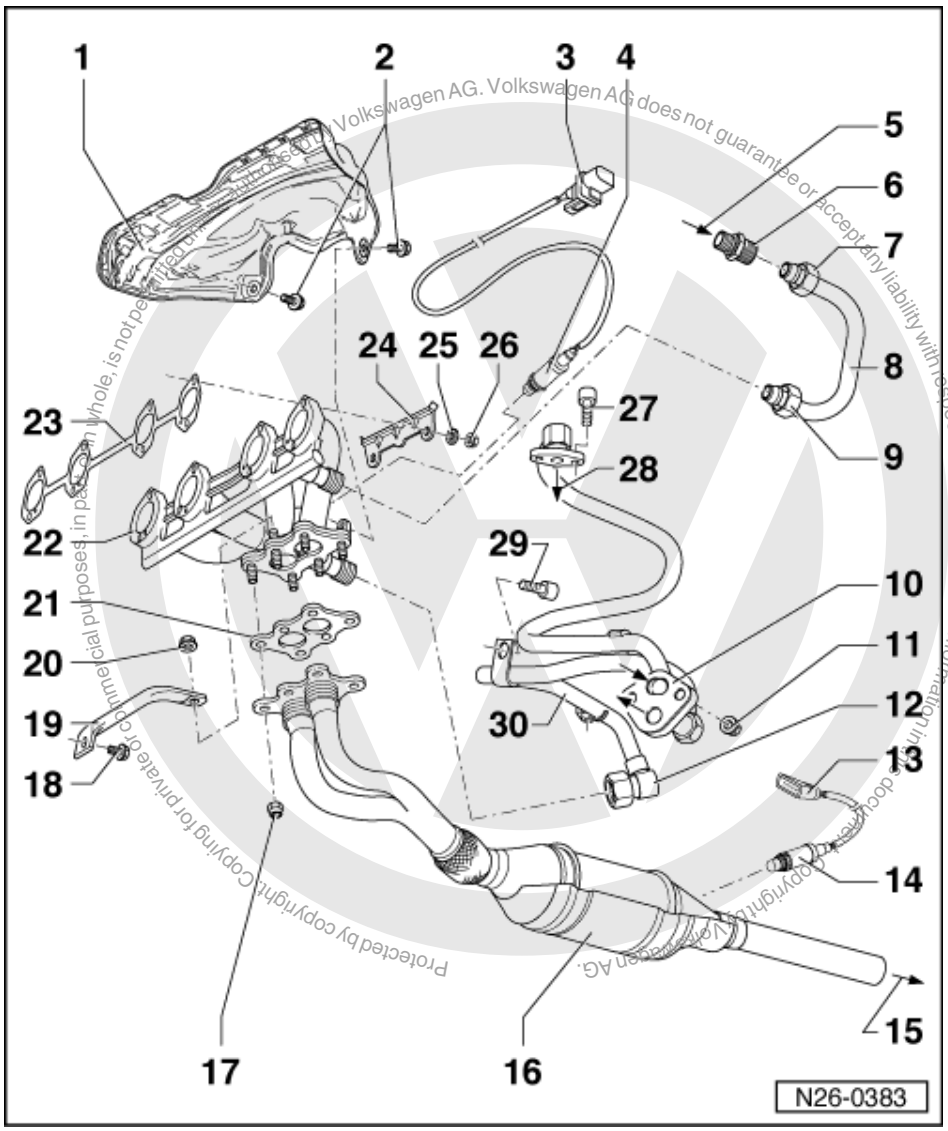


Engine codes: APF, AUR

1 Heat shield
2 25 Nm
3 6-pin connector
- Black for Lambda probe 1 before catalyst (G39) and Lambda probe heater (Z19)
- Contacts gold plated

4 Lambda probe 1 before catalyst (G39)*, 50Nm
- Constantly operating Lambda probe
- Grease only the threads with "G 052 112 A3"; "G 052 112 A3" must not get into the slots on the probe body
- Remove and install with Lambda probe open ring spanner set 3337
- Checking:

=> Repair group 24; Checking functions; Checking Lambda probe and Lambda control in front of catalyst Checking functions Checking Lambda probe and Lambda control in front of catalyst

satelettronica

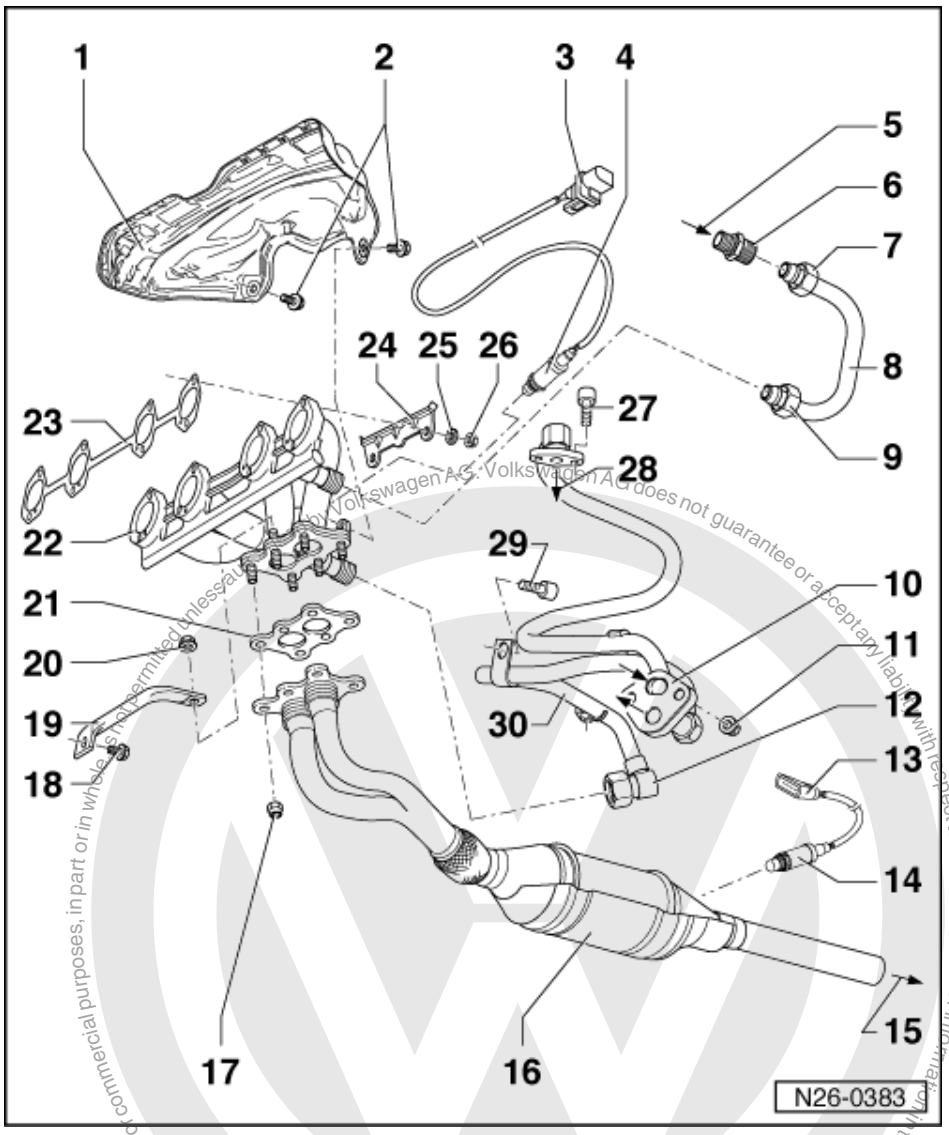


5 From combi-valve
- Secondary air system =>Page 173

6 Union, 35 Nm

7 25 Nm

8 Pipe
- Secondary air system =>Page 173

9 25 Nm

10 Flange
- For securing connecting pipe to EGR valve (N18)

11 25 Nm
- Renew

12 60 Nm

Protected by copyright. Copyright by Volkswagen AG.
Volkswagen AG does not guarantee or accept any liability with respect to the correctness of information in this document. Copyright by Volkswagen AG.
For commercial purposes, in part or in whole, is not permitted unless authorized by Volkswagen AG.
satelettronica

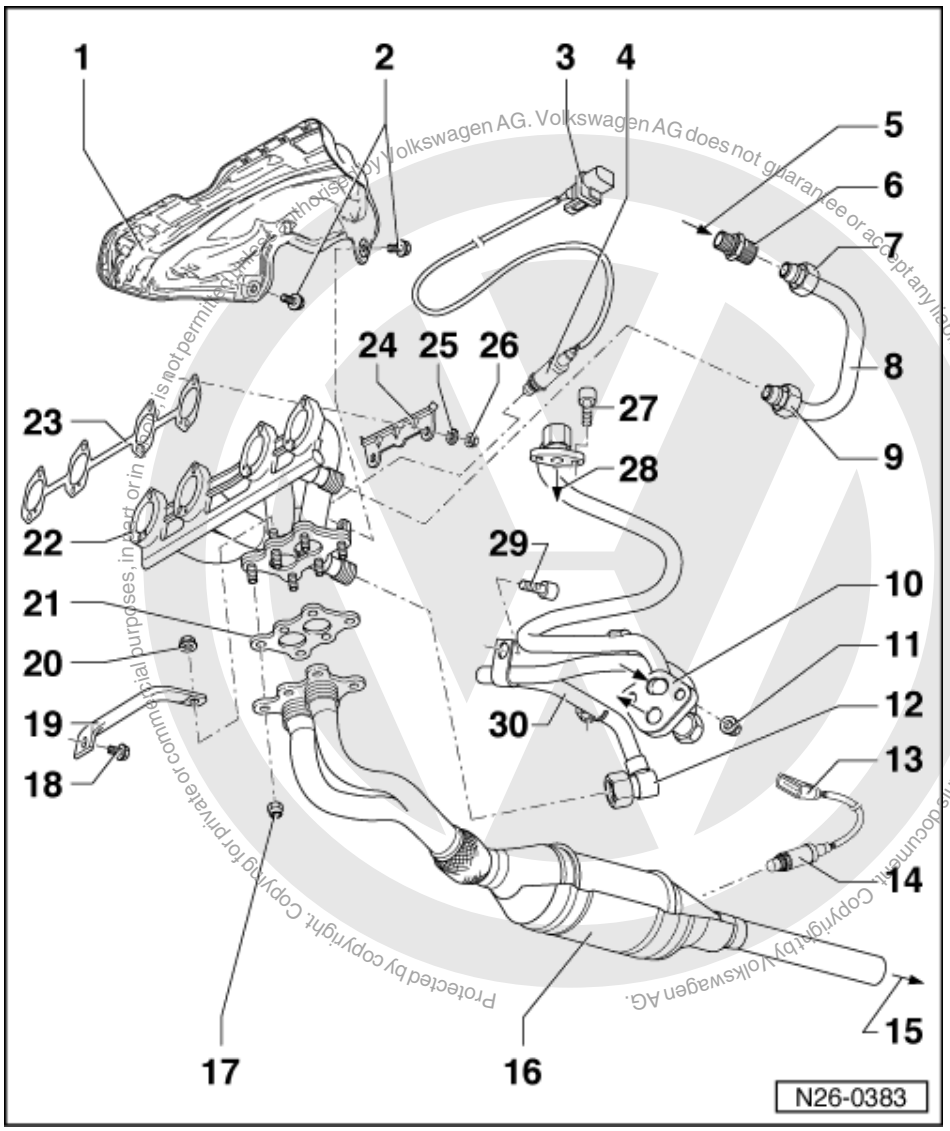


Protected by copyright. Copying for private or commercial purposes, in part or in whole, is not permitted unless authorised by Volkswagen AG. Volkswagen AG does not guarantee or accept any liability with respect to the correctness of information in this document. Copyright by Volkswagen AG.

satelettronica

13 4-pin connector

- For Lambda probe 2 after catalyst (G130) and Lambda probe heating (Z29)
- Contacts 3 and 4 gold-plated

14 Lambda probe 2 after catalyst (G130)*, 50 Nm

- Grease only the threads with "G 052 112 A3"; "G 052 112 A3" must not get into the slots on the probe body
- Remove and install with Lambda probe open ring spanner set 3337
- Checking:

=> Repair group 24; Checking functions; Checking Lambda probe and Lambda regulation behind catalyst
Checking functions Checking Lambda probe and Lambda regulation behind catalyst

15 To front silencer

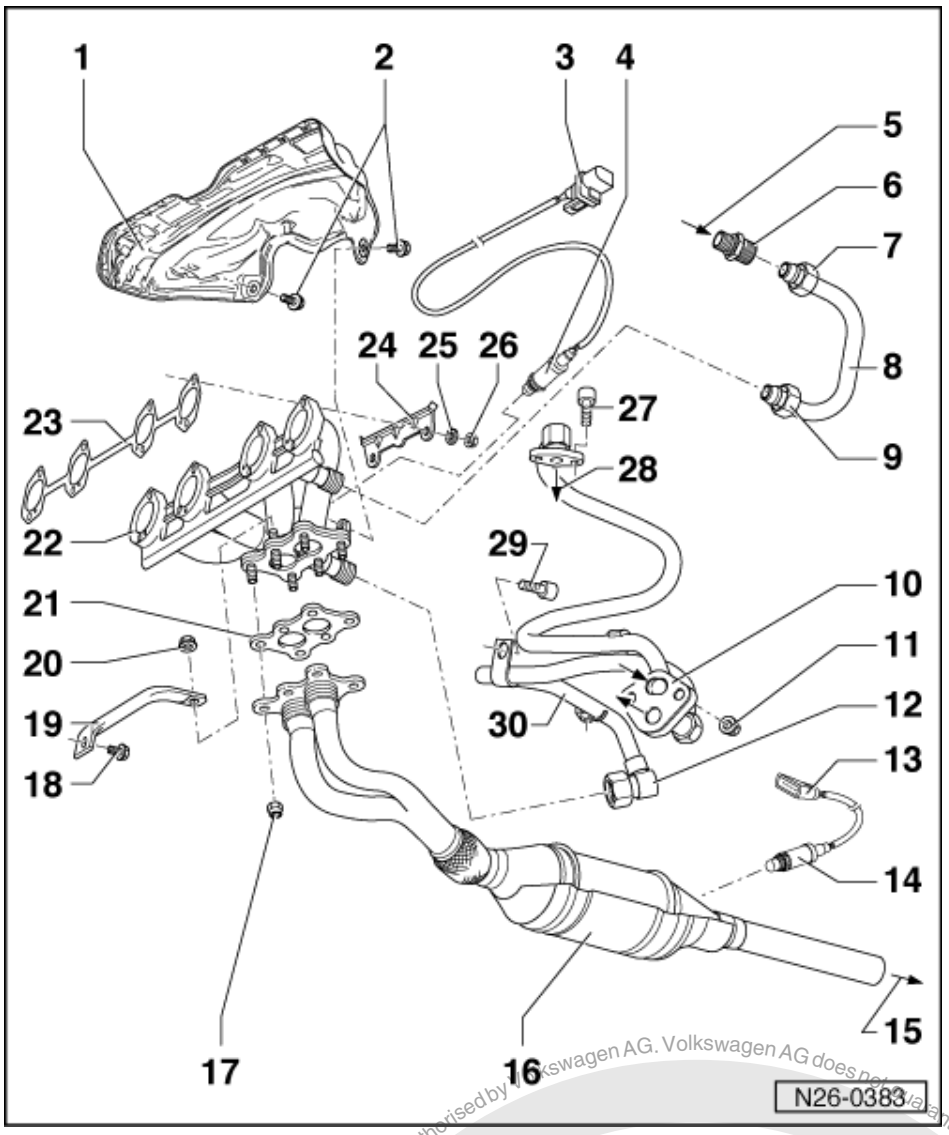


16 Front exhaust pipe with catalyst
- To remove, remove assembly mounting

=> Running gear, axles, steering; Repair group 40; Servicing front suspension strut; Removing and installing assembly mounting Servicing front suspension strut Removing and installing assembly mounting

- Check catalyst
  => Page 172

17 40 Nm
- Renew

18 25 Nm

19 Support

20 20 Nm
- Renew

21 Gasket
- Renew

22 Exhaust manifold

Protected by copyright. Copying for private or commercial purposes, in part or in whole, is not permitted unless authorised by Volkswagen AG. Volkswagen AG does not guarantee or accept any liability with respect to the correctness of information in this document. Copyright by Volkswagen AG.

satelettronica

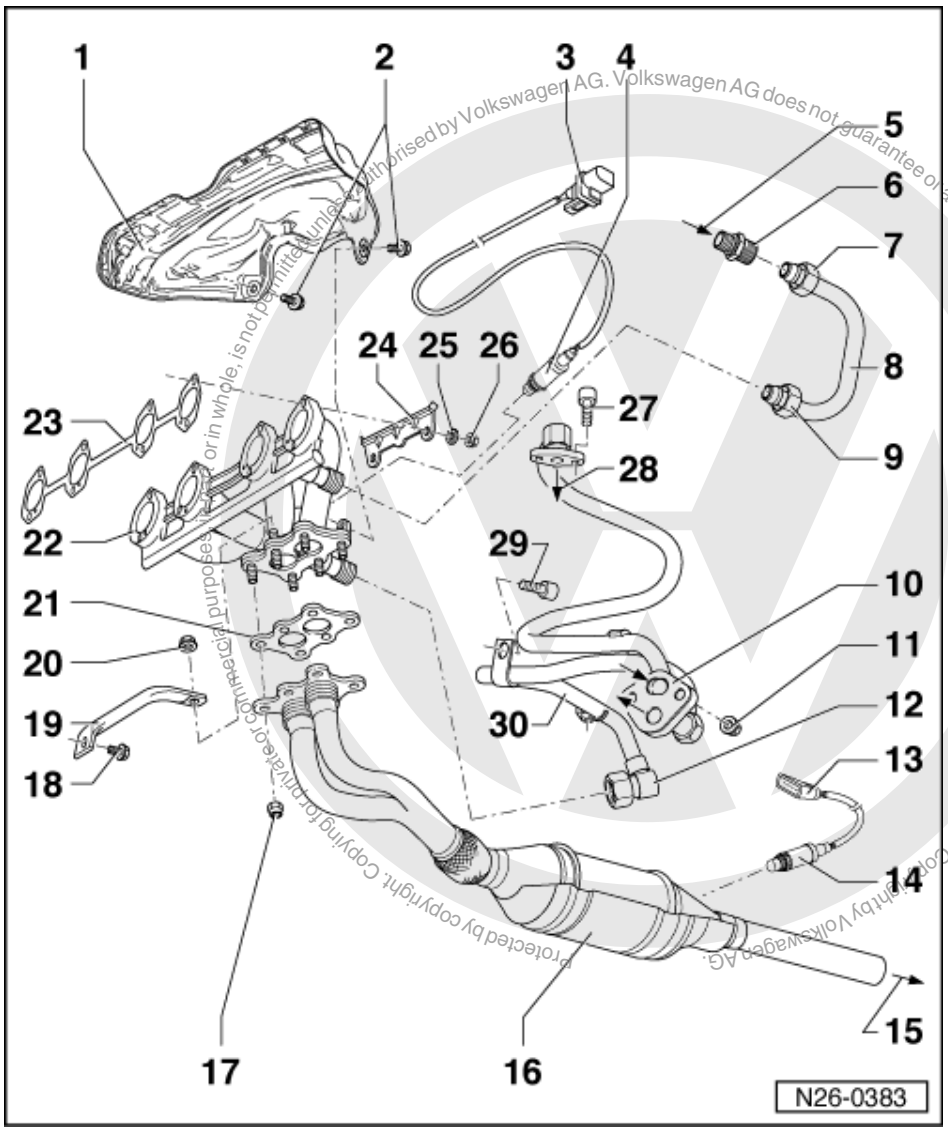


23 Gasket
- Renew

24 Bracket

25 Washer
- Not present if collared nut fitted

26 25 Nm
- Renew

27 10 Nm

28 To throttle valve control part (J338*)

29 25 Nm

30 Pipe
- Exhaust gas recirculation system =>Page 182

satelettronica

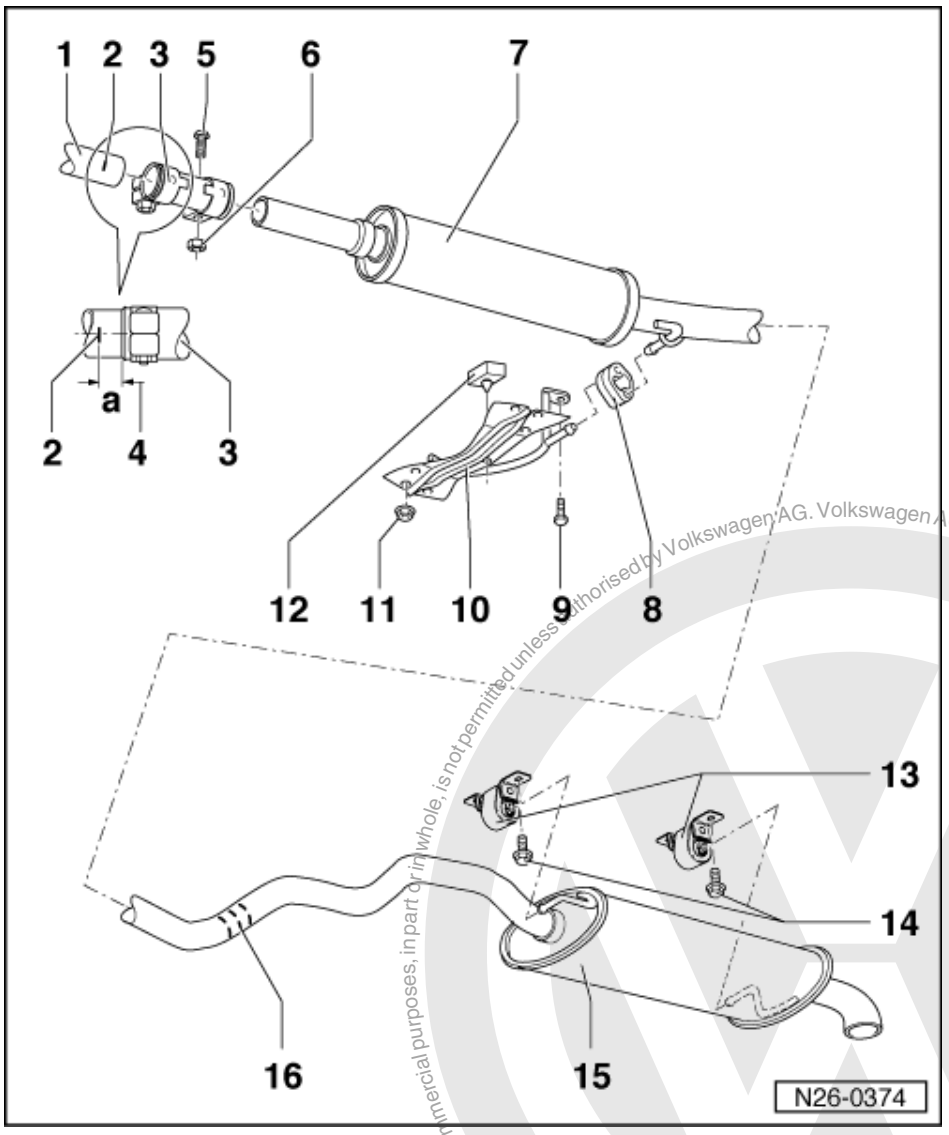


Silencer with mountings

1 Front exhaust pipe with catalyst
2 Marking
3 Double clamp
4 Dimension-a- = ca. 5 mm
5 Carriage bolt
6 40 Nm
7 Front silencer
8 Mounting
- Renew if damaged

9 25 Nm
10 Connecting piece
11 15 Nm
12 Bump stop

Protected by copyright. Copying for private or commercial purposes, in part or in whole, is not permitted unless authorised by Volkswagen AG. Volkswagen AG does not guarantee or accept any liability with respect to the correctness of information in this document. Copyright by Volkswagen AG.
satelettronica

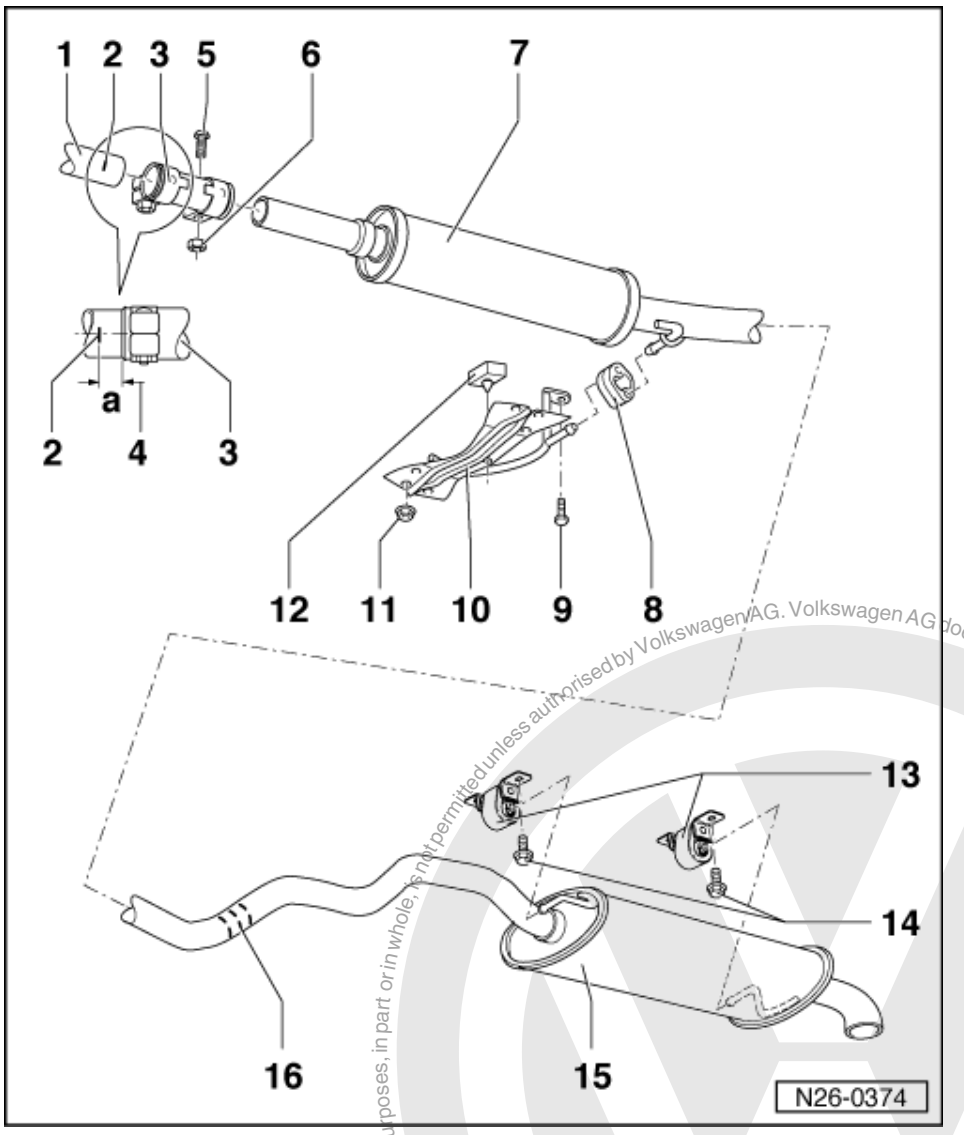


13 Mounting
- With retaining ring
- Renew if damaged

14 20 Nm + 1/4 turn (90 °) further

15 Rear silencer

16 Separating point
- For repair cases
- Marked by three impressions on circumference of exhaust pipe
- As standard, front and rear silencers are installed as a single component. For repair purposes the front and rear silencers are supplied individually with a double clamp for connecting together.
- Cut through connecting pipe with suitable tool, e.g. pneumatic jig-saw V.A.G.1523, at right angle to separating point => Fig. 1

Protected by copyright. Copying for private or commercial purposes, in part or in whole, is not permitted unless authorised by Volkswagen AG. Volkswagen AG does not guarantee or accept any liability with respect to the correctness of information in this document. Copyright by Volkswagen AG.
satelettronica

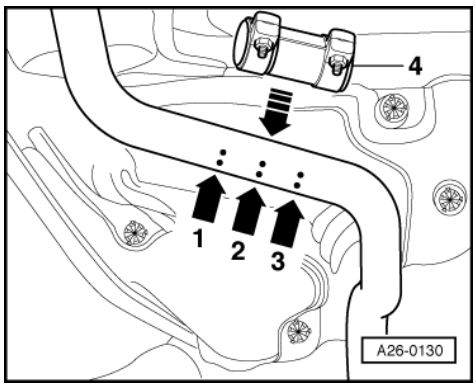


-> Fig. 1 Separating point on exhaust pipe

- Separate exhaust pipe at right angles at separating point -arrow 2-.
- When installing fit repair type double clamp -4- at side markings -arrows 1 and 3-.
  Tightening torque 40 Nm

## 1.3 - Checking catalyst

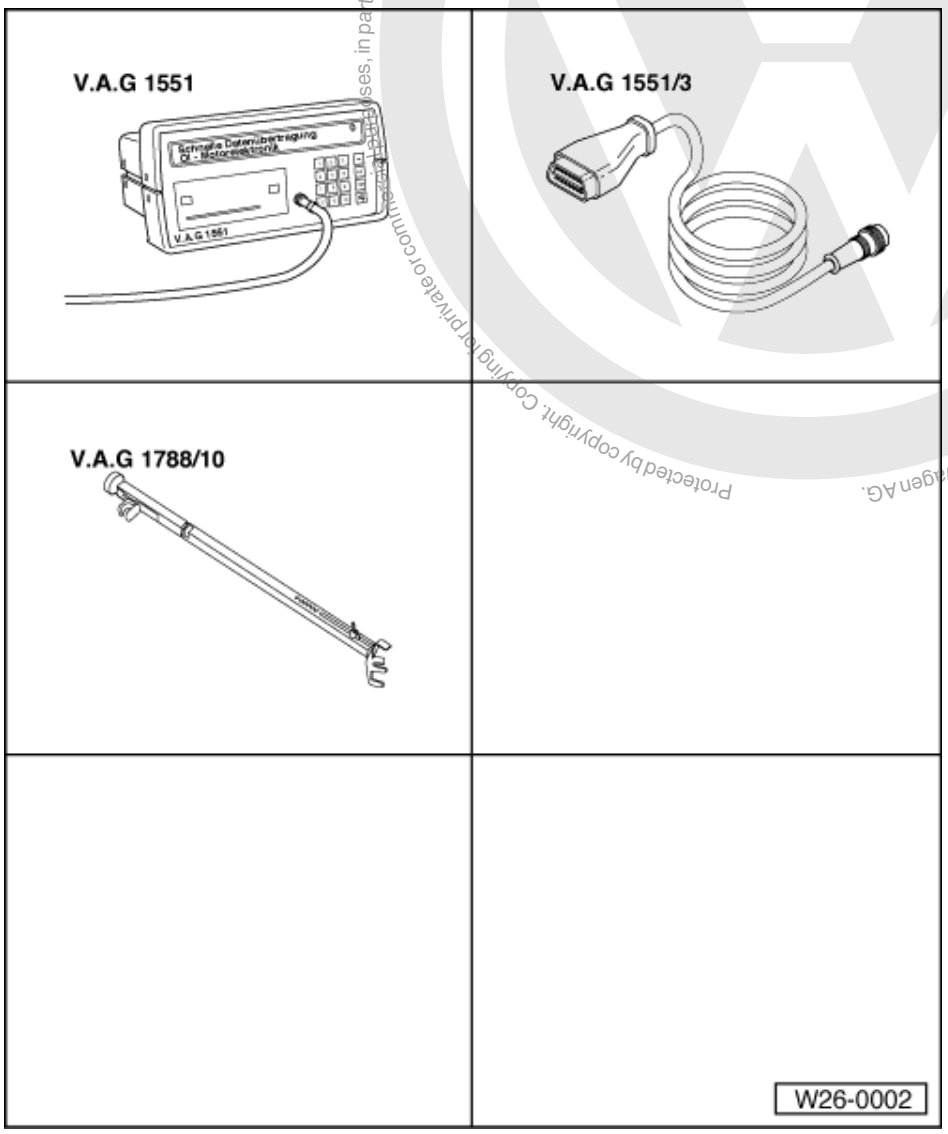


Protected by copyright. Copying for private or commercial purposes, in part or in whole, is not permitted unless authorised by Volkswagen AG. Volkswagen AG does not guarantee or accept any liability with respect to the correctness of information in this document. Copyright by Volkswagen AG.
satelettronica

This test does not work for the engine codes: AEH, AKL

Special tools, workshop equipment, test and measuring appliances and auxiliary items required

- V.A.G 1551 Fault reader
- V.A.G 1551/3 Cable
- V.A.G 1788/10 speed regulator

*Note:*

*The vehicle system tester V.A.G 1552 can be used instead of the fault reader V.A.G 1551, but a print-out is not possible.*

Check conditions

- Exhaust system between catalyst and cylinder head must be free of leaks
- Coolant temperature must be at least 80 °C, =>display group 04, display zone 3.

Test sequence

- Connect fault reader V.A.G 1551 (V.A.G 1552). Start engine and select engine control unit with "Address word" 01. Connecting fault reader and selecting engine control unit:

=> Repair group 01; Self-diagnosis general: Connecting fault reader V.A.G 1551 and selecting engine electronics control unit. Self-diagnosis general: Connecting fault reader V.A.G 1551 and selecting engine electronics control unit.

- Interrogate fault memory. Repair faults as necessary and then erase fault memory.

=> Repair group 01; Fault memory; Interrogating and erasing fault memory of engine control unit Fault memory Interrogating and erasing fault memory of engine control unit

- Then:
  - Leave fault reader V.A.G 1551 connected.

-> Indicated on display:

```
Rapid data transfer      HELP
Select function XXX
```

- Press keys 0 and 4 for the function "Initiating basic settings" and confirm entry with Q key.

-> Indicated on display:

```
Basic setting
Input display group number XXX
```

- Press keys 0, 4 and 6 for "Display group number 46" and confirm entry with Q key.

-> Indicated on display:
(1...4 = Display zones)

```
Basic setting 46
     1     2     3     4
```

- Depress brake pedal.

  The engine speed is increased by the control unit to approx. 1100...1300 rpm.

- Allow engine to run at increased engine speed until display zone 4 jumps from "Test OFF" to "Test ON". The catalyst temperature in display zone 2 must be a minimum of 400 °C.

Protected by copyright. Copying for private or commercial purposes, in part or in whole, is not permitted unless authorised by Volkswagen AG. Volkswagen AG does not guarantee or accept any liability with respect to the correctness of information in this document. Copyright by Volkswagen AG.
satelettronica

*Note:*

*This process can take a few minutes.*

- Allow the engine to continue to run at increased engine speed until display zone 4 displays "Cat B1 OK."

If "Cat. B1 not OK" appears in display zone 4:

- Interrogate fault memory:

=> Repair group 01; Fault memory; Interrogating and erasing fault memory of engine control unit Fault memory Interrogating and erasing fault memory of engine control unit

***Not for vehicles with D4 emissions standard (emissions warning lamp not in service)***

*This test is intended for vehicles with on-board diagnosis and indicates possible damage to catalyst. If "Cat B1 n. OK" is displayed, the catalyst need not always be renewed, but only if the next emissions test is not passed or if visible damage to catalyst can be determined.*

If the emissions test is not passed or if damage to catalyst can be determined:

- Renew catalyst.

If the specification "Cat B1 OK" is obtained:

- Press ⇒key.

-> Indicated on display:

```
Rapid data transfer     HELP
Select function XXX
```

- Press keys 0 and 6 for the function "End output" and confirm entry with the Q key.

# 2 - Secondary air system

## 2.1 - Secondary air system

## 2.2 - Function

The secondary air system blows air in behind the exhaust valve for up to 100 seconds following a cold start (+17 °C ... +33 °C coolant temperature). This enriches the exhaust gas with oxygen, causing afterburning and shortening the heating phase of the catalyst. Activation is performed by the Simos control unit (J361) via the secondary air pump relay (J299) to the secondary air inlet valve (N112, change-over valve) and combi-valve.

Protected by copyright. Copying for private or commercial purposes, in part or in whole, is not permitted unless authorised by Volkswagen AG. Volkswagen AG does not guarantee or accept any liability with respect to the correctness of information in this document. Copyright by Volkswagen AG.
satelettronica

## 2.3 - Removing and installing parts of the secondary air system

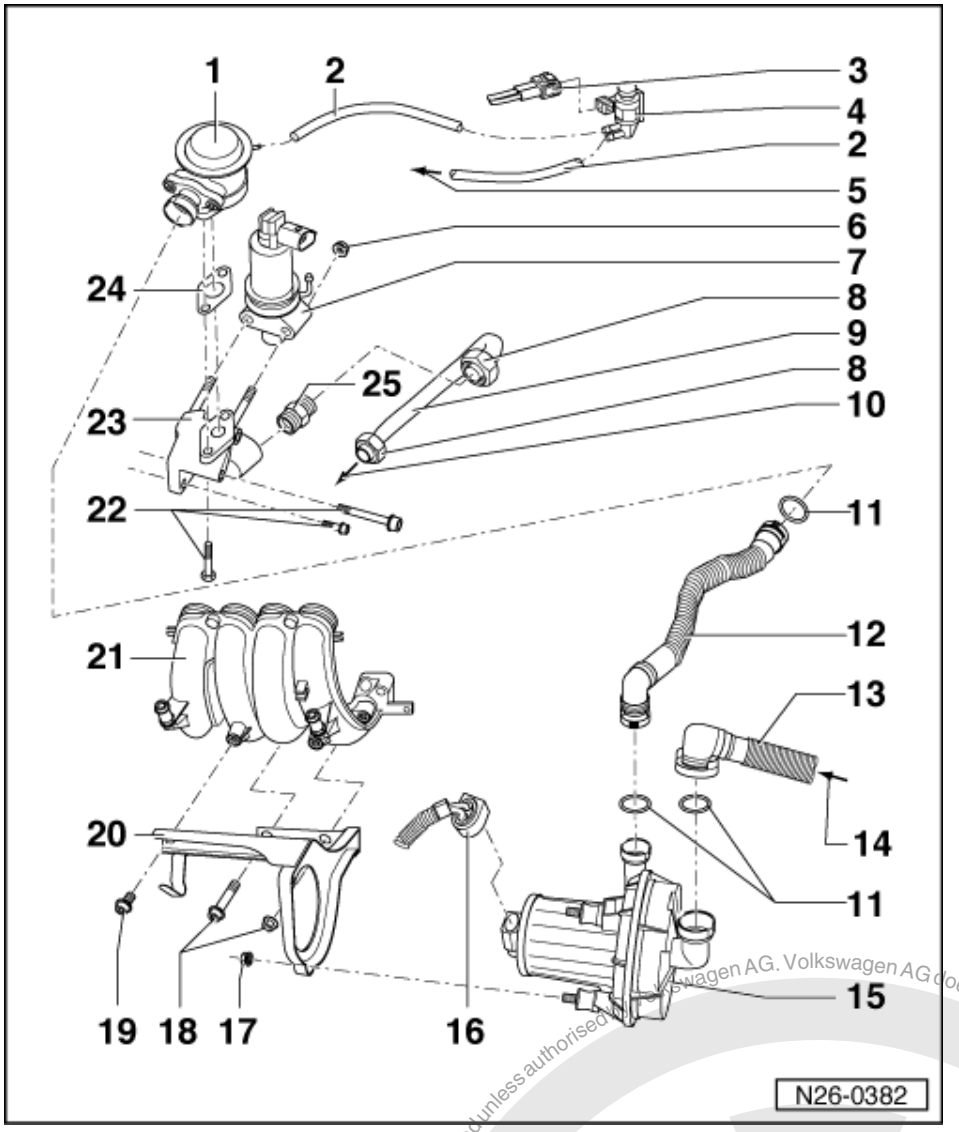


*Notes:*

- Components marked with an * are checked by the self-diagnosis:

=> Repair Group 01; Fault memory; Interrogating and erasing engine control unit fault memory Fault memory Interrogating and erasing engine control unit fault memory

- Components marked with ** are checked by the final control diagnosis:

=> Repair group 01; Final control diagnosis; Performing final control diagnosis Final control diagnosis Performing final control diagnosis

- Secondary air pump relay (J299) =>Page 178 , Fig. 1

1 Combi-valve
  - Checking =>Page 180

2 Vacuum hose

3 Connector

satelettronica
Protected by copyright. Copying for private or commercial purposes, in part or in whole, is not permitted unless authorised by Volkswagen AG. Volkswagen AG does not guarantee or accept any liability with respect to the correctness of information in this document. Copyright by Volkswagen AG.

- 2-pin

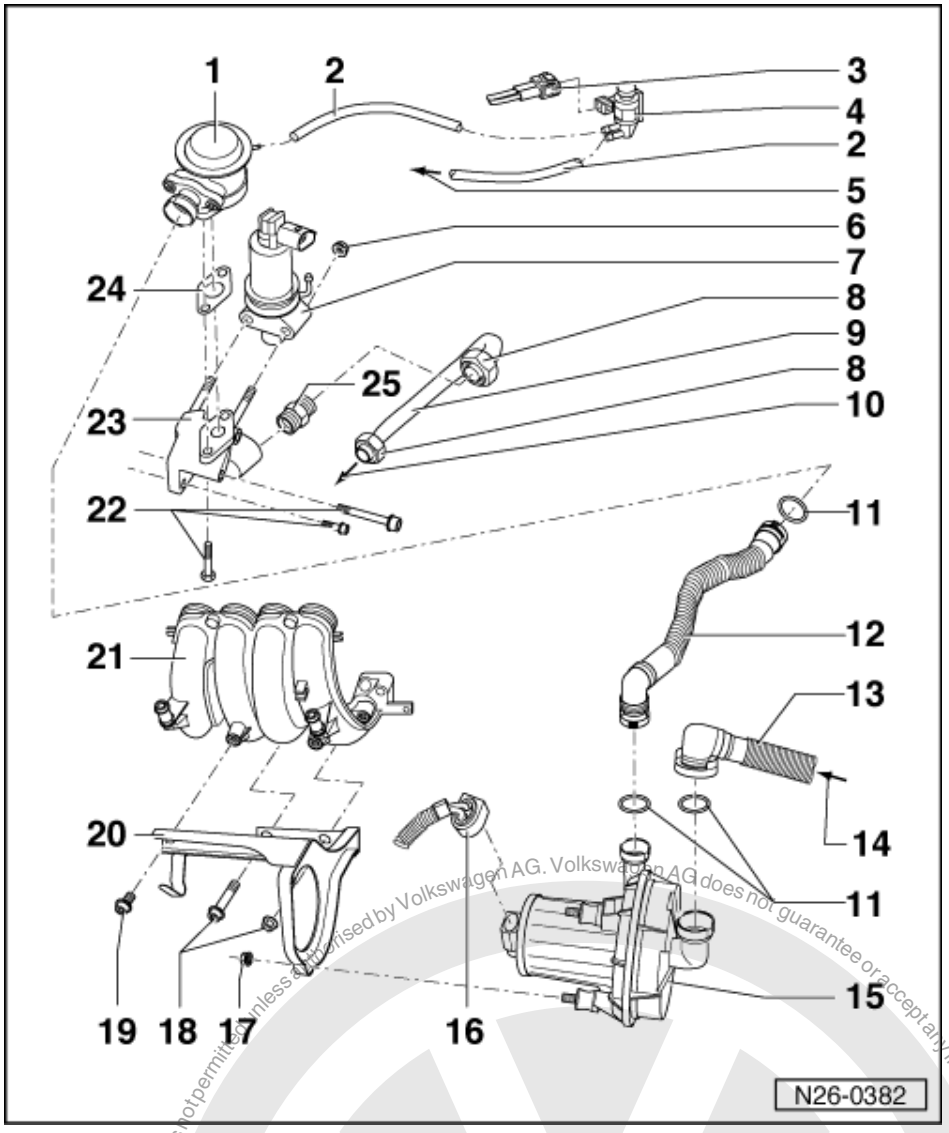


4 Secondary air inlet valve (N112)*/**

5 To connection on pipe to brake servo

6 25 Nm

7 EGR valve (N18)*/** with potentiometer for exhaust gas recirculation (G212)*

- Check EGR valve (N18):

=> Repair group 01; Final control diagnosis; Performing final control diagnosis Final control diagnosis Performing final control diagnosis

- Check potentiometer for exhaust gas recirculation (G212) =>Page 188

8 25 Nm

9 Pipe

Protected by copyright. Copying for private or commercial purposes, in part or in whole, is not permitted unless authorised by Volkswagen AG. Volkswagen AG does not guarantee or accept any liability with respect to the correctness of information in this document. Copyright by Volkswagen AG.

satelettronica

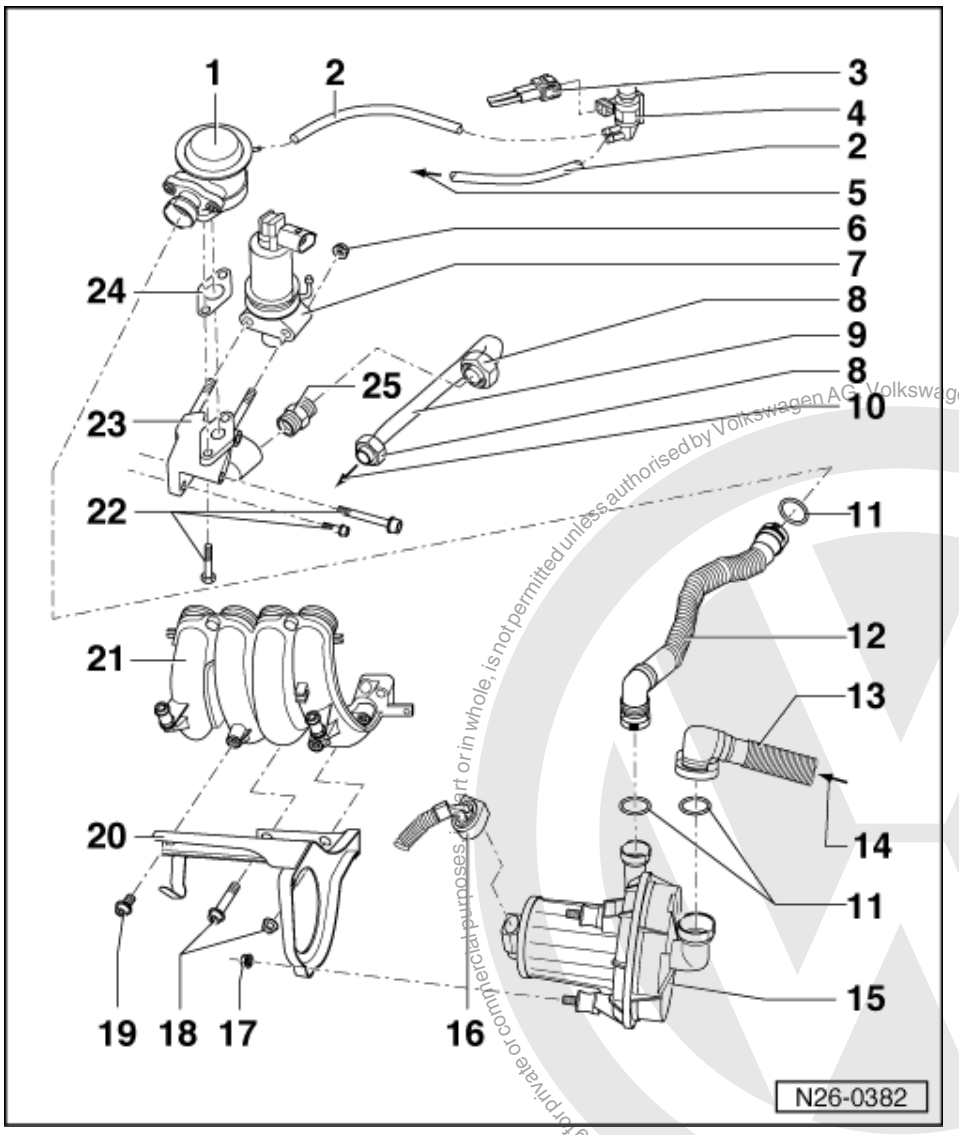


10 To union on exhaust manifold

11 O-ring
- Renew

12 Pressure hose
- Ensure seated tightly
- Press together at front to release

13 Intake hose
- For secondary air pump motor

14 From air cleaner

15 Secondary air pump motor (V101)
- Checking function =>Page 178

16 Connector
- 2-pin

17 10 Nm

18 25 Nm

Protected by copyright. Copying for private or commercial purposes, in part or in whole, is not permitted unless authorised by Volkswagen AG. Volkswagen AG does not guarantee or accept any liability with respect to the correctness of information in this document. Copyright by Volkswagen AG.
satelettronica

Protected by copyright. Copying for private or commercial purposes, in part or in whole, is not permitted unless authorised by Volkswagen AG. Volkswagen AG does not guarantee or accept any liability with respect to the correctness of information in this document. Copyright by Volkswagen AG.

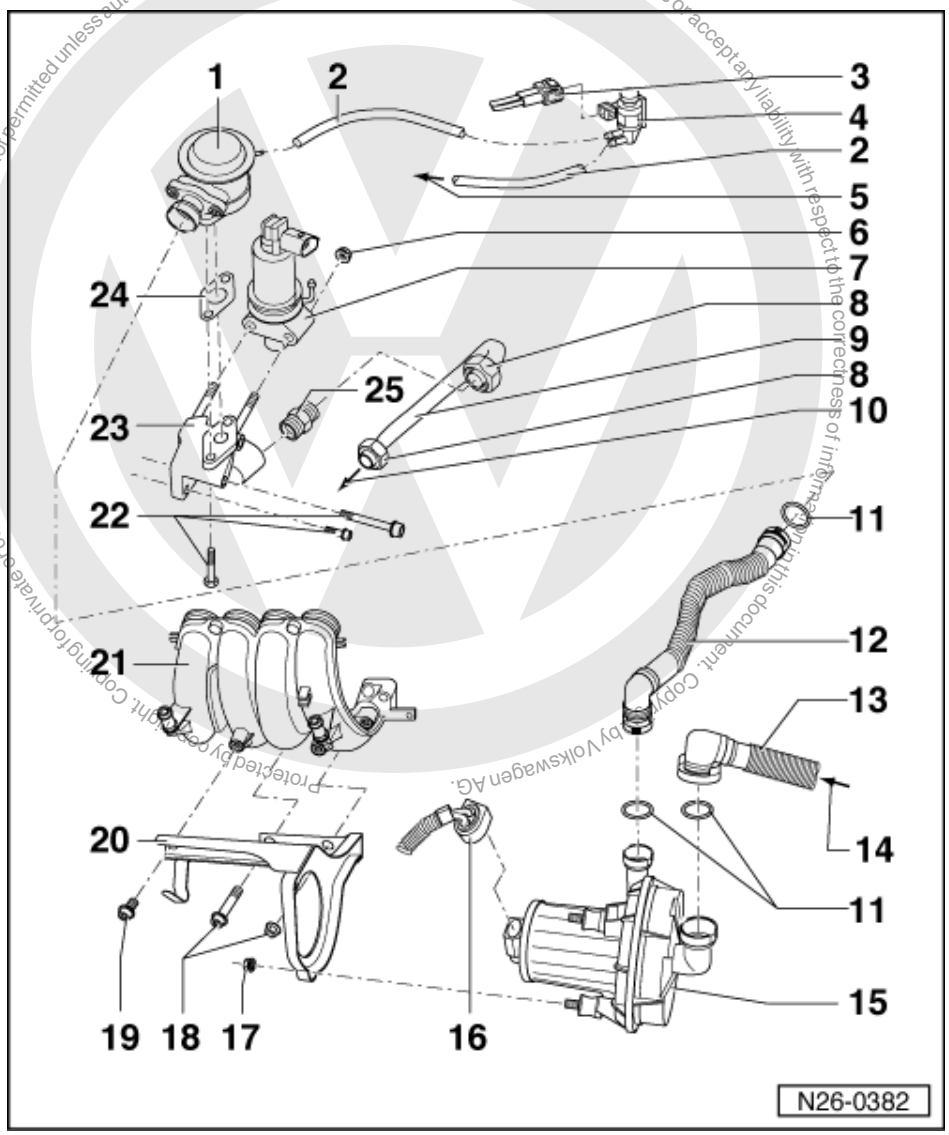


19 15 Nm

20 Bracket

- For secondary air pump motor
- Secured to intake manifold

21 Intake manifold - lower part

22 10 Nm

23 Connecting piece

- With mounting for combi-valve and EGR valve (N18)

24 Gasket

- Renew

25 Union, 35 Nm

satelettronica

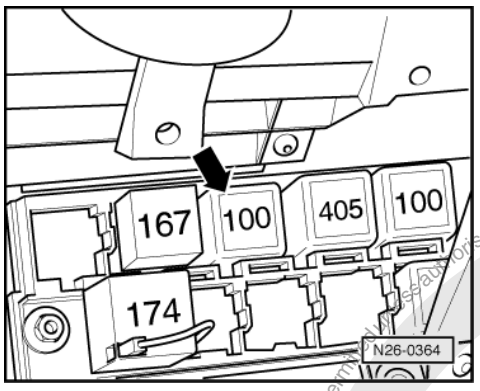


-> Fig.1 Secondary air pump relay (J299) -arrow-

- If tools are necessary to pull relays or control units out of the relay plate, first disconnect battery earth strap.
- Before disconnecting battery earth strap obtain code for radios with anti-theft coding.

## 2.4 - Checking secondary air pump motor

**Special tools, workshop equipment, testers, measuring instruments and auxiliary items required**

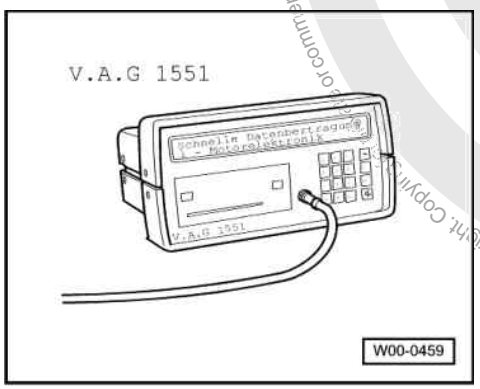


- V.A.G 1551 Fault reader

***Note:***

*The vehicle system tester V.A.G 1552 can be used instead of the fault reader V.A.G 1551, however a print-out is not possible.*

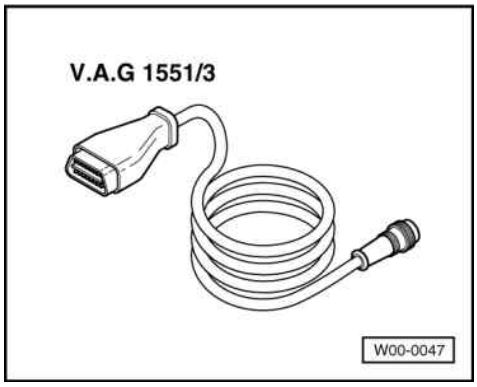


- V.A.G 1551/3 Cable

Protected by copyright. Copyright by Volkswagen AG.
Copyright by Volkswagen AG. Volkswagen AG does not guarantee or accept any liability with respect to the correctness of information in this document.
satelettronica

Check conditions

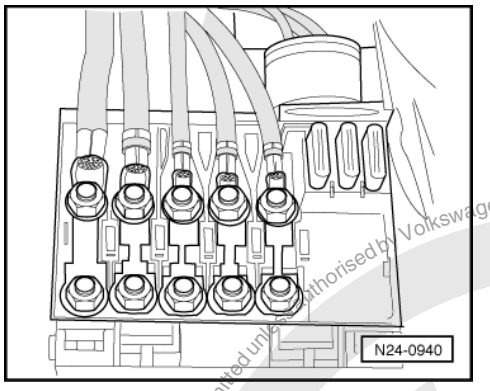


- -> The main fuses must be OK.
- The intake hose for secondary air pump is not blocked or kinked.
- The battery voltage must be at least 11.5 V.
- The fuses must be OK.

Test sequence

- Remove engine cover.
- Detach the pressure hose from the secondary air pump motor.

*Note:*

*To release, press together the buttons on the hose coupling.*

- Activate the secondary air pump relay via the final control diagnosis.

=> Repair group 01; Final control diagnosis; Performing final control diagnosis Final control diagnosis Performing final control diagnosis

- The secondary air pump motor must run for approx. 10 seconds, and air must exit the outlet connections.

If the motor runs, but little or no air exits:

- Press ⇒key.
- Press keys 0 and 6 for the "End output" function and confirm input with the Q key.
- Replace secondary air pump motor.

If the secondary air pump motor does not run:

- Check activation of secondary air pump motor:

=> Repair group 01; Final control diagnosis; Performing final control diagnosis Final control diagnosis Performing final control diagnosis

## 2.5 - Checking combi-valve

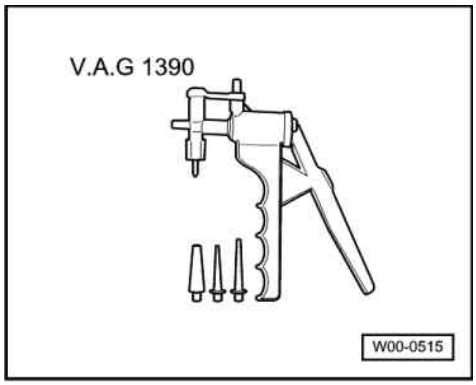


Protected by copyright. Copyright by Volkswagen AG. Copying for private or commercial purposes, in part or in whole, is not permitted unless authorised by Volkswagen AG. Volkswagen AG does not guarantee or accept any liability with respect to the correctness of information in this document.
satelettronica

Special tools, workshop equipment, testers, measuring instruments and auxiliary items required

- V.A.G 1390 Hand vacuum pump

Check conditions

- Vacuum pipes and hose connections free of leaks.
- Vacuum pipes not blocked/kinked.

Test sequence

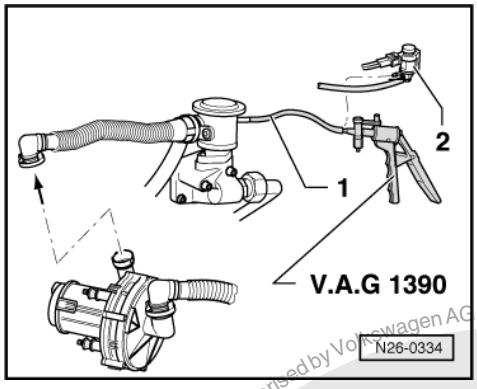


- -> Pull vacuum hose -1- off secondary air inlet valve -2- (N112).
- Connect hand vacuum pump V.A.G 1390 to vacuum hose -1-.

*Note:*

*Do not use compressed air during the following check!*

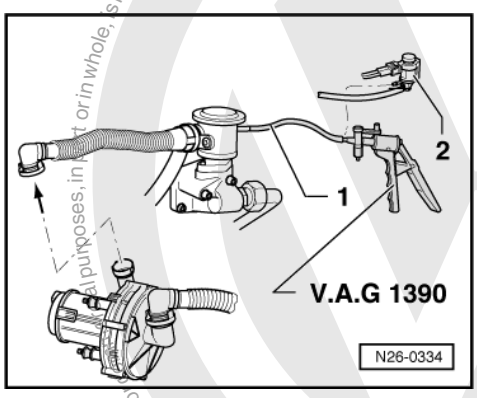


- -> Detach pressure hose from secondary air pump motor and blow in lightly -arrow-.
  Combi-valve must be closed.
- Operate hand vacuum pump.
  Combi-valve must open.

If the combi-valve does not open, or is permanently open:

- Replace the combi-valve

Protected by copyright. Copyright by Volkswagen AG. Volkswagen AG does not guarantee or accept any liability with respect to the correctness of information in this document. Copyright by Volkswagen AG.
satelettronica

## 2.6 - Checking secondary air inlet valve

### Special tools, workshop equipment, testers, measuring instruments and auxiliary items required

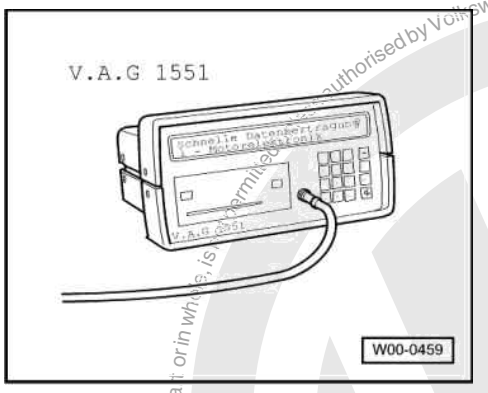


- V.A.G 1551 Fault reader

*Note:*

*The vehicle system tester V.A.G 1552 can be used instead of the fault reader V.A.G 1551, however a print-out is not possible.*

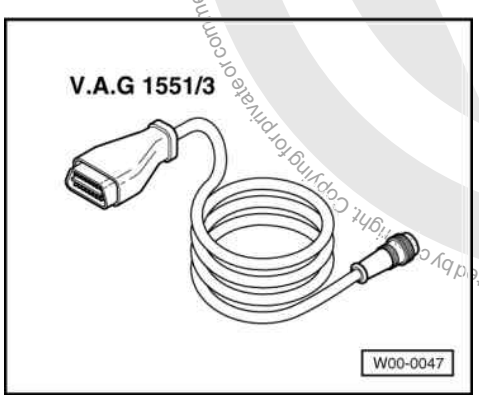


- V.A.G 1551/3 Cable

### Test conditions

- Secondary air pump motor OK.
- Vacuum pipes connected and air-tight.
- Vacuum pipes not blocked/kinked.

### Test sequence

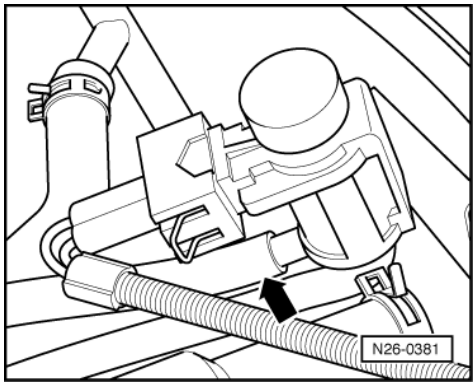


Protected by copyright. Copying for private or commercial purposes, in part or in whole, is not permitted unless authorised by Volkswagen AG. Volkswagen AG does not guarantee or accept any liability with respect to the correctness of information in this document. Copyright by Volkswagen AG.
satelettronica

- -> Pull upper vacuum hose -arrow- off secondary air inlet.

- Activate the secondary air pump relay via the final control diagnosis.

=> Repair group 01; Final control diagnosis; Performing final control diagnosis Final control diagnosis Performing final control diagnosis

- The secondary air pump motor must run at approx. 10 second intervals, and suction (negative air pressure) must be felt at secondary air inlet valve connections.

If no intake manifold vacuum is perceptible:

- Check activation of valve:

=> Repair group 01; Final control diagnosis; Performing final control diagnosis Final control diagnosis Performing final control diagnosis

# 3 - Exhaust gas recirculation system

## 3.1 - Exhaust gas recirculation system

*Notes:*

- The function/control of the exhaust gas recirculation system is checked by the self-diagnosis of the Simos control unit (J361).
- Pulsed control makes every conceivable valve position possible.
- The cone shaped plunger in the (electric) EGR valve ensures that various cross sectional openings are possible at different plunger lifts.
- Checking exhaust gas recirculation valve (N18).

=> Repair group 01; Final control diagnosis; Performing final control diagnosis Final control diagnosis Performing final control diagnosis

- Components marked with an * are checked via the self-diagnosis.

=> Repair group 01; Fault memory; Interrogating and erasing fault memory of engine control unit Fault memory Interrogating and erasing fault memory of engine control unit

- Components marked with ** are checked via the final control diagnosis.

=> Repair group 01; Final control diagnosis; Performing final control diagnosis Final control diagnosis Performing final control diagnosis

Protected by copyright. Copying for private or commercial purposes, in part or in whole, is not permitted unless authorised by Volkswagen AG. Volkswagen AG does not guarantee or accept any liability with respect to the correctness of information in this document. Copyright by Volkswagen AG.

satelettronica

## 3.2 - Servicing parts of exhaust gas recirculation system

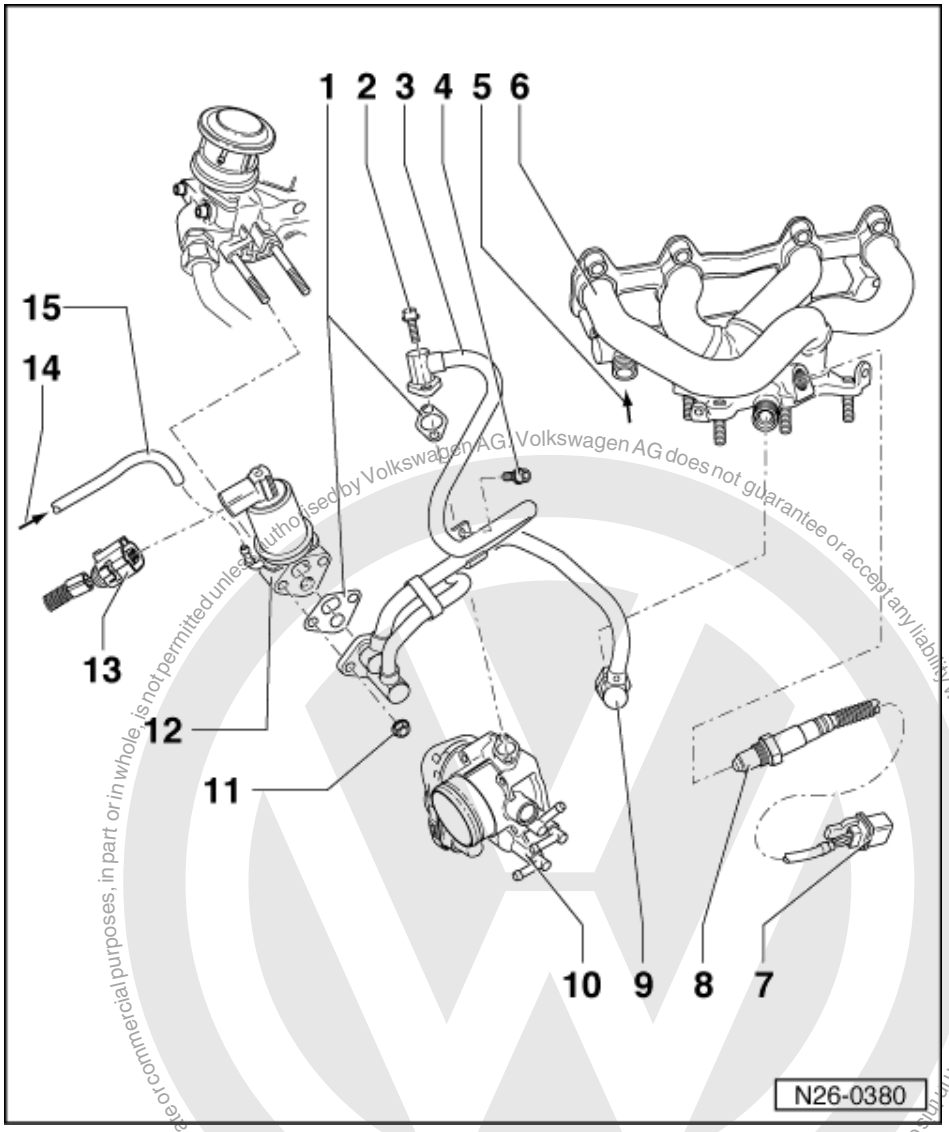


1 Gasket
- Renew

2 10 Nm

3 Connecting pipe

4 25 Nm

5 From combi-valve
- Secondary air system =>Page 173

6 Exhaust manifold

7 6-pin connector
- Black for Lambda probe 1 before catalyst (G39) and Lambda probe heater (Z19)
- Contacts gold plated

Protected by copyright. Copying for private or commercial purposes, in part or in whole, is not permitted unless authorised by Volkswagen AG. Volkswagen AG does not guarantee or accept any liability with respect to the correctness of information in this document. Copyright by Volkswagen AG.
satelettronica

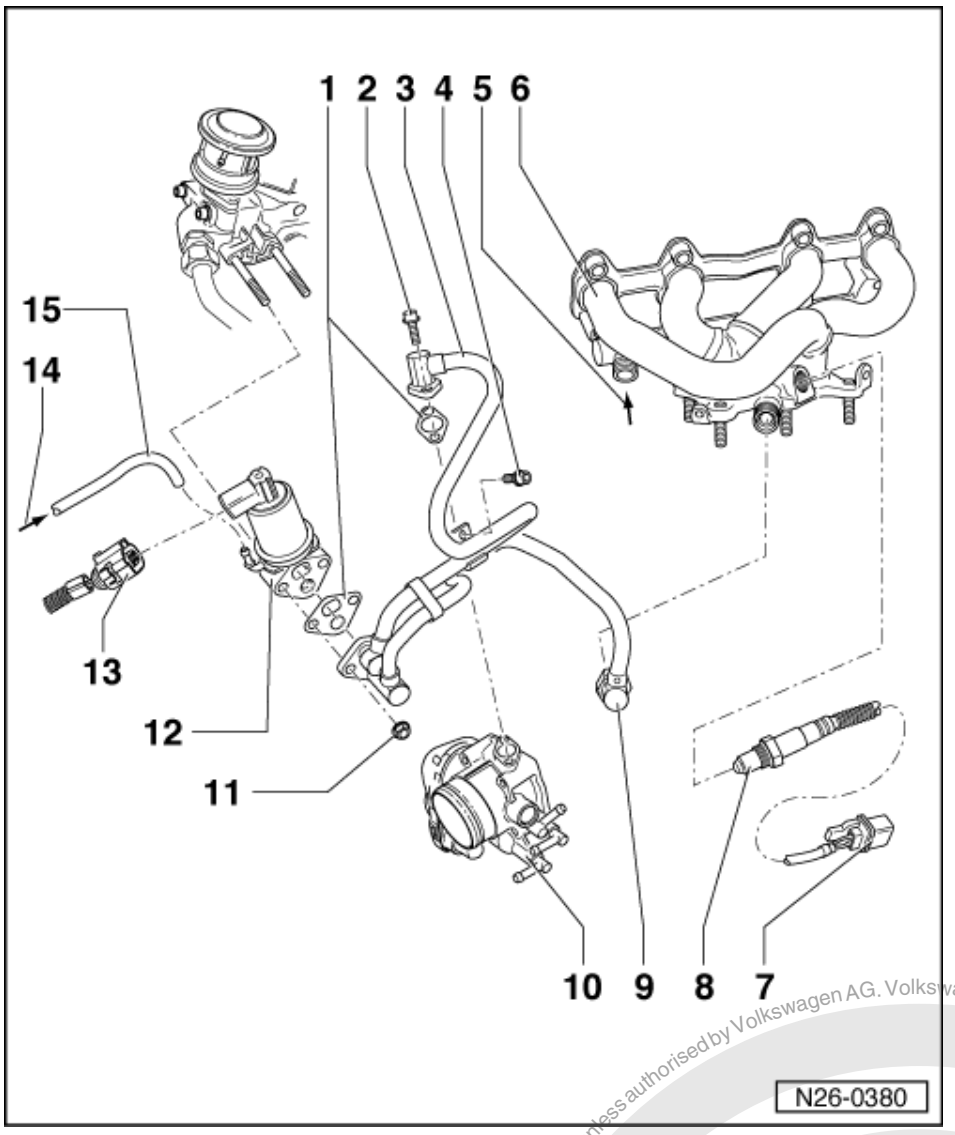


8 Lambda probe 1 before catalyst (G39)*, 50Nm

- Constantly operating Lambda probe
- Grease only the threads with "G 052 112 A3"; "G 052 112 A3" must not get into the slots on the probe body
- Remove and install with Lambda probe open ring spanner set 3337
- Checking:

=> Repair group 24; Checking functions; Checking Lambda probe and Lambda control in front of catalyst
Checking functions Checking Lambda probe and Lambda control in front of catalyst

9 60 Nm

10 Throttle valve control part (J338)*

11 25 Nm

satelettronica
Protected by copyright. Copying for private or commercial purposes, in part or in whole, is not permitted unless authorised by Volkswagen AG. Volkswagen AG does not guarantee or accept any liability with respect to the correctness of information in this document. Copyright by Volkswagen AG.

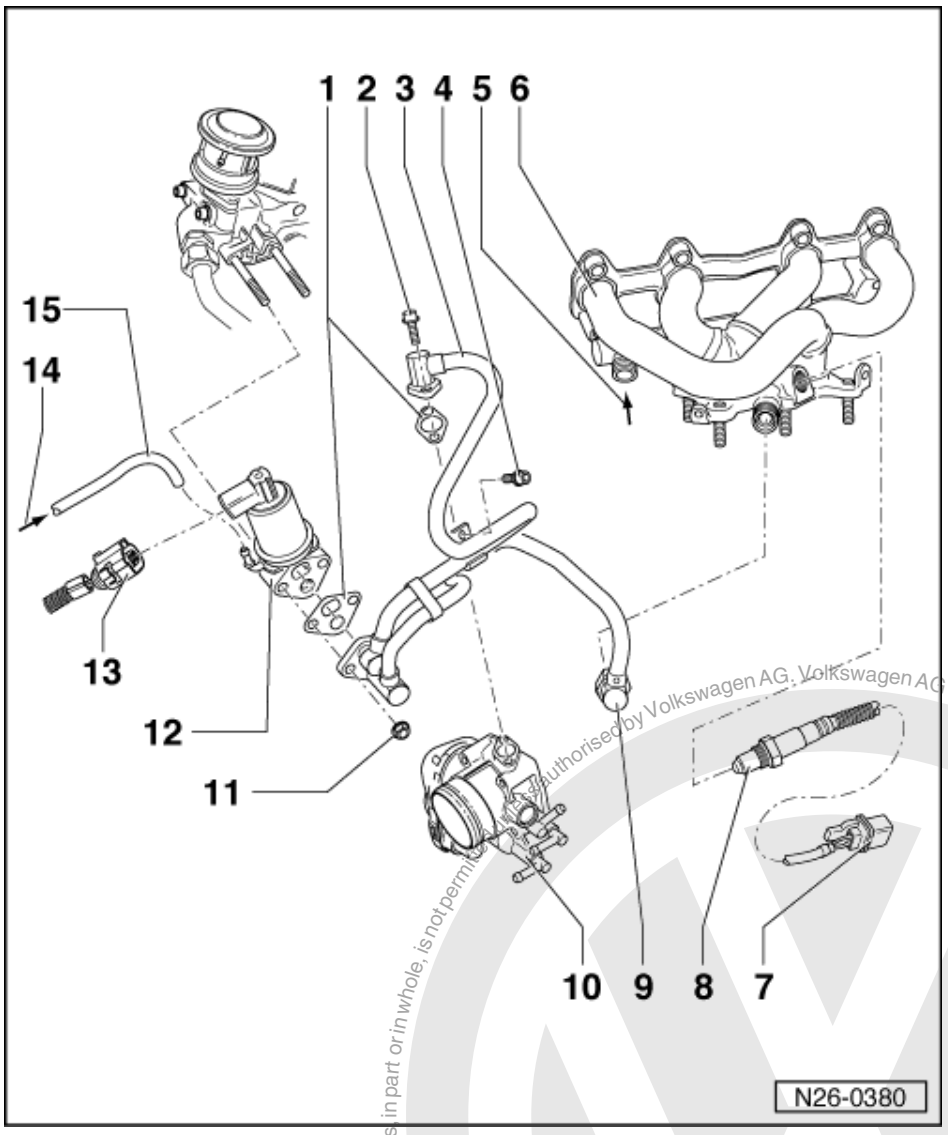


12 EGR valve (N18)*/** with potentiometer for exhaust gas recirculation (G212)*

- Check EGR valve (N18):

=> Repair group 01; Final control diagnosis; Performing final control diagnosis Final control diagnosis Performing final control diagnosis

- Check potentiometer for exhaust gas recirculation (G212) =>Page 188

13 6-pin connector
14 From air cleaner
15 Air hose

Protected by copyright. Copyright for private or commercial purposes in part or in whole, is not permitted unless authorised by Volkswagen AG. Volkswagen AG does not guarantee or accept any liability with respect to the correctness of information in this document. Copyright by Volkswagen AG.
satelettronica

## 3.3 - Checking exhaust gas recirculation system

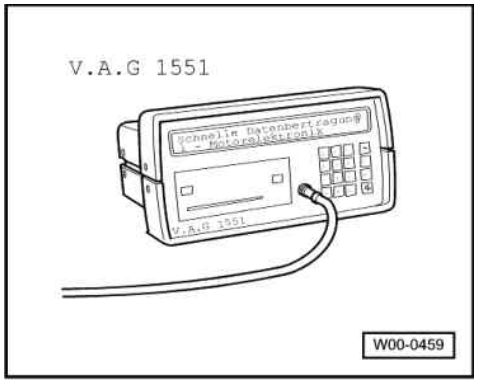


Only engine code AUR

Special tools, workshop equipment, testers, measuring instruments and auxiliary items required

- Fault reader V.A.G 1551 (or vehicle system tester V.A.G 1552) with cable V.A.G 1551/3

Test conditions

- The fuses must be OK.
- The battery voltage must be at least 11.5 V.
- All electrical consumers, e.g. lights and rear window heating must be switched off.
- Coolant temperature must be at least 80 °C, =>display group 04, display zone 3.

Work sequence

- Connect fault reader V.A.G 1551 (V.A.G 1552). Start engine and let it idle. Select engine control unit with "Address word" 01. Connecting fault reader and selecting engine control unit:

=> Repair group 01; Self-diagnosis general: Connecting fault reader V.A.G 1551 and selecting engine electronics control unit. Self-diagnosis general: Connecting fault reader V.A.G 1551 and selecting engine electronics control unit.

-> Indicated on display:

```
Rapid data transfer      HELP
Select function XXX
```

- Press keys 0 and 4 for the "Introduce basic setting" function and confirm entry with Q key.

-> Indicated on display:

```
Basic setting
Input display group number XXX
```

- Press keys 0, 7 and 5 for the "Display group number 75" and confirm entry with Q key.

-> Indicated on display:
(1...4 = Display zones)

```
System in basic setting      75
     1     2     3     4
```

If the diagnosis is initiated by engine control unit the display in display zone 4 jumps from "Test OFF" to "Test ON"

*Note:*

*During "Test on" the exhaust gas recirculation valve is open partially by the engine control unit. The idling speed drops and the engine runs uneven. The potentiometer for the exhaust gas recirculation informs the engine*

Copyright by Volkswagen AG. Volkswagen AG does not guarantee or accept any liability with respect to the correctness of information in this document. Copyright by Volkswagen AG. Transmitted or copied only in accordance with the terms of the valid VW license agreement or with the express authorization of Volkswagen AG. Not to be passed on to third parties or made available to unauthorized persons. Copyright by Volkswagen AG. Volkswagen AG does not guarantee or accept any liability with respect to the correctness of information in this document. Copyright by Volkswagen AG. Transmitted or copied only in accordance with the terms of the valid VW license agreement or with the express authorization of Volkswagen AG. Not to be passed on to third parties or made available to unauthorized persons.

satelettronica

*control unit of the actual opening angle. The actual status is compared with the specified status and the result of the diagnosis is displayed.*

- Let engine continue to idle until the result of the functional test is displayed in display zone 4:
  Specification: "Syst. OK"

If the display does not indicate as described:

- Interrogate fault memory:

=> Repair group 01; Fault memory; Interrogating and erasing fault memory of engine control unit Fault memory Interrogating and erasing fault memory of engine control unit

- Check exhaust gas recirculation valve activation:

=> Repair group 01; Final control diagnosis; Performing final control diagnosis Final control diagnosis Performing final control diagnosis

- Check exhaust gas recirculation potentiometer =>Page 188

If the display indicates as described:

- Press ⇒key.
- Press keys 0 and 6 for the "End output" function and confirm input with the Q key.

Protected by copyright. Copying for private or commercial purposes, in part or in whole, is not permitted unless authorised by Volkswagen AG. Volkswagen AG does not guarantee or accept any liability with respect to the correctness of information in this document. Copyright by Volkswagen AG.
satelettronica

## 3.4 - Checking potentiometer for exhaust gas recirculation

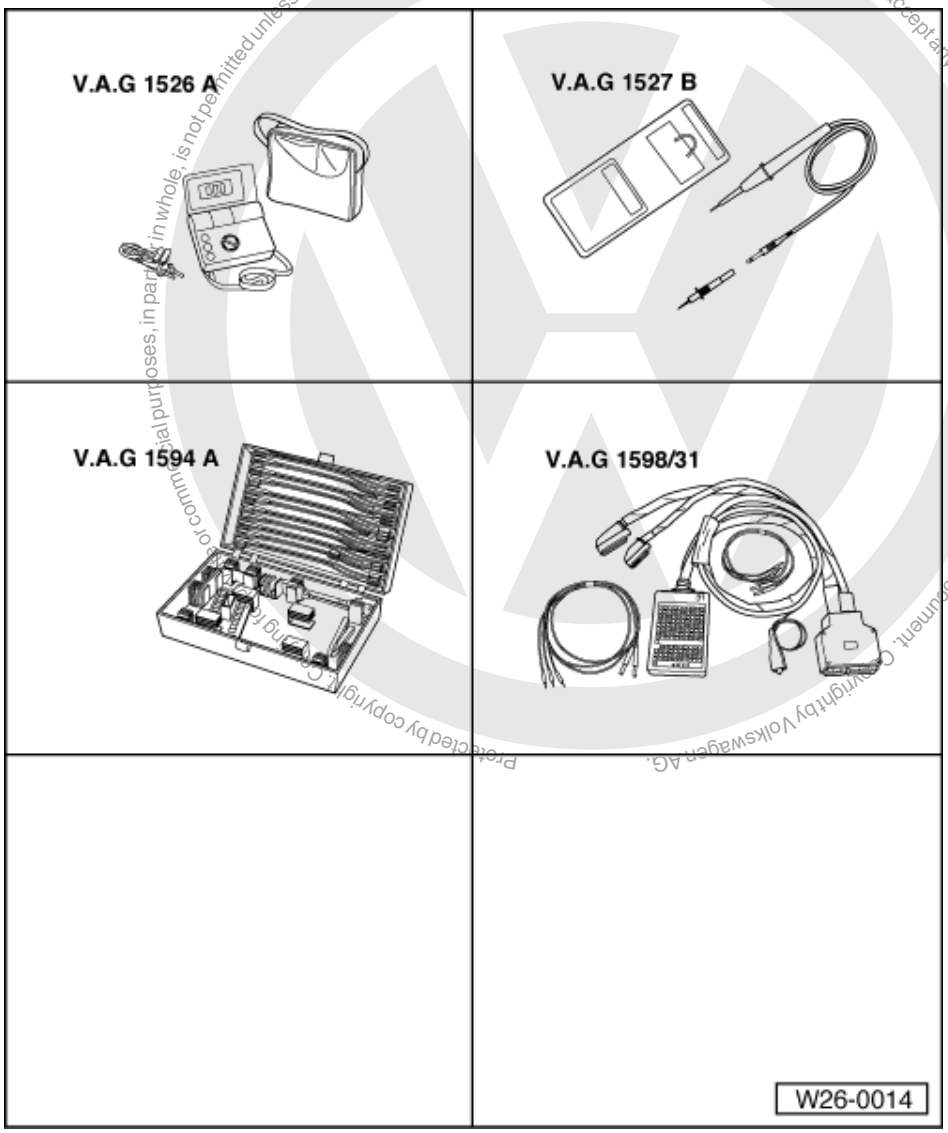


### Special tools, workshop equipment, test and measuring appliances and auxiliary items required

- V.A.G 1526 Hand multimeter
- V.A.G 1527 B Diode test lamp
- V.A.G 1594 A Adapter set
- V.A.G 1598/31 Test box
- Fault reader V.A.G 1551 or vehicle system tester V.A.G 1552 with cable V.A.G 1551/3
- Current flow diagram

### Test conditions

- The fuses must be OK.

satelettronica

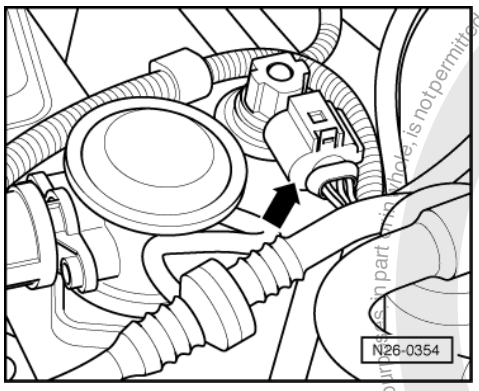


- The battery voltage must be at least 11.5 V.

**Test sequence**

- -> Pull off 6-pin connector -arrow- (grey) from EGR valve.

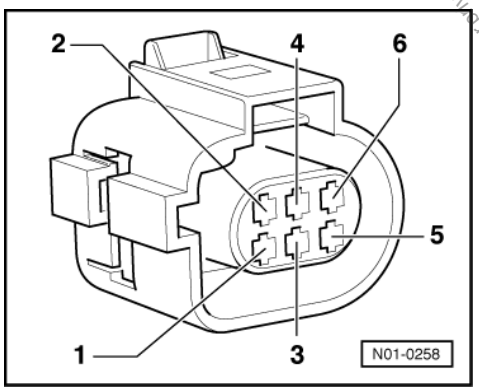


- -> Connect multimeter to contacts 2 and 4 of 6-pin connector for voltage measurement.
- Switch on ignition.
  Specification: min. 4.5 V

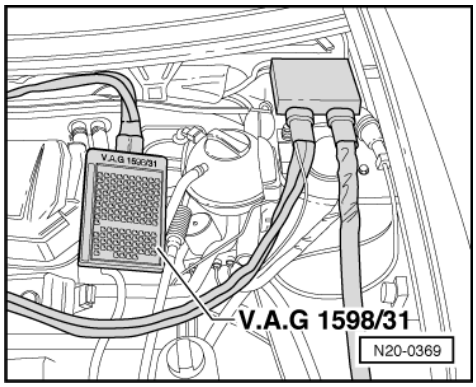


If the specification is not attained:

- Switch off ignition.
- -> Connect test box V.A.G 1598/31 to control unit wiring harness. The engine control unit remains disconnected.

Protected by copyright. Copying for private or commercial purposes, in part or in whole, is not permitted unless authorised by Volkswagen AG. Volkswagen AG does not guarantee or accept any liability with respect to the correctness of information in this document. Copyright by Volkswagen AG.
satelettronica

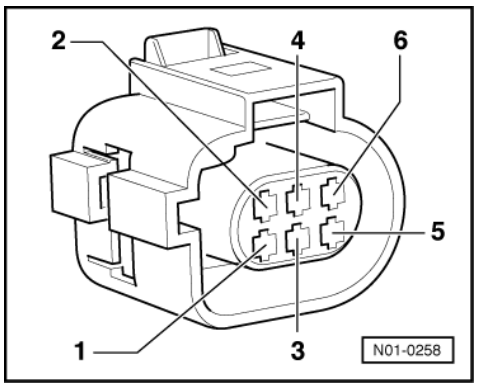


- -> Check wiring for open circuit between test box and 6-pin connector using current flow diagram.
  Contact 2 and test box socket 96
  Contact 4 and test box socket 84
  Contact 6 and test box socket 108
  Wire resistance: max. 1.5 ω
- Additionally check wiring for short to one another, and for short to positive or earth.

If the specification is obtained:

- Connect test box V.A.G 1598/31 to engine control unit as well and reconnect 6-pin connector to EGR valve.
- Connect the fault reader V.A.G 1551 (V.A.G 1552). Then switch ignition on and select engine control unit with the "Address word" 01.

=> Repair group 01; Self-diagnosis general; Connecting fault reader V.A.G 1551 and selecting engine electronics control unit. Self-diagnosis general; Connecting fault reader V.A.G 1551 and selecting engine electronics control unit.

- Initiate final control diagnosis and select EGR valve (N18):

=> Repair group 01; Final control diagnosis; Performing final control diagnosis Final control diagnosis Performing final control diagnosis

- Connect diode test lamp V.A.G 1527 B to socket 108 of test box and earth using adapters from V.A.G 1594.
  The LED must flash.
- Proceed with final control diagnosis until completed.
- Press keys 0 and 6 for the function "End output" and confirm entry with the Q key.
- Switch off ignition.
- Depending on conditions, renew following components:

LED flashes:

- Renew EGR valve (N18) with potentiometer (G212).

- Erase learnt values and re-adapt engine control unit

=> Repair group 24; Engine control unit; Erasing learnt values and adapting engine control unit to throttle valve control part and EGR valve Engine control unit Erasing learnt values and adapting engine control unit to throttle valve control part and EGR valve

If no wiring fault is detected and the LED does not flash:

- Renew engine control unit.

=> Repair group 24; Engine control unit; Renewing engine control unit Engine control unit Renewing engine control unit

satelettronica